HF-235

OPERATION & MAINTENANCE MANUAL

HF-235 Communications Receiver.

Operation and Maintenance Manual.

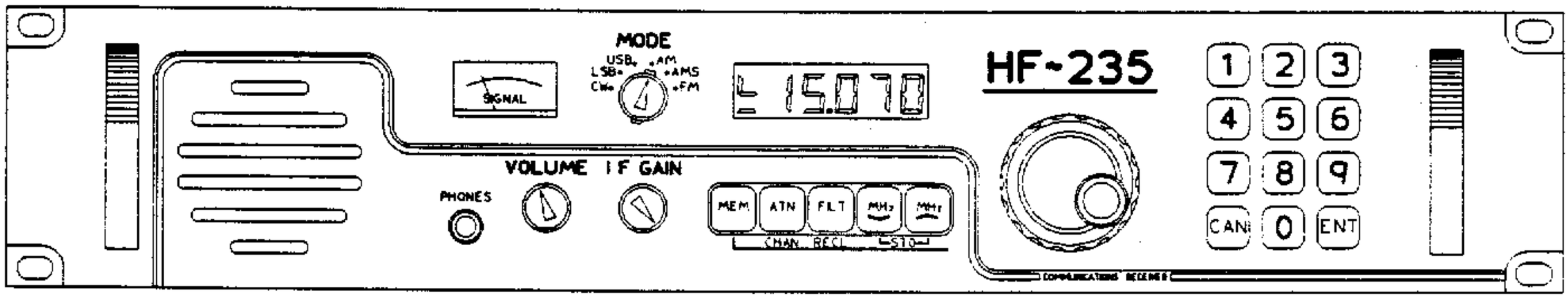

Contents.

Operation	Controls	2
	Tuning	4
	Modes and Filters	5
	R F / I F Gain	6
	Memory operations	7
	Special functions	8
	Rear panel controls and connections	9
	Remote operation	10
	General notes	14
Installation	Mechanical details	15
	Power supply and control	16
	Audio output	17
	Antenna connection	18
	Remote control connection	19
Technical	Block diagram	21
	RF and IF circuit description	22
	PLL circuit description	27
	Control unit description	29
	Semiconductor data	38
Maintenance	Signal levels	47
	Test and alignment	48
	Disassembly	53
	Option unit installation	56
	Parts list	58
Specification		63
PCB layouts and Circuit diagrams		66

(c) 1990 Lowe Electronics Ltd.
Bentley Bridge
Chesterfield Road
Matlock, Derbyshire.
Printed in England. **M02-2350**

Front Panel controls.

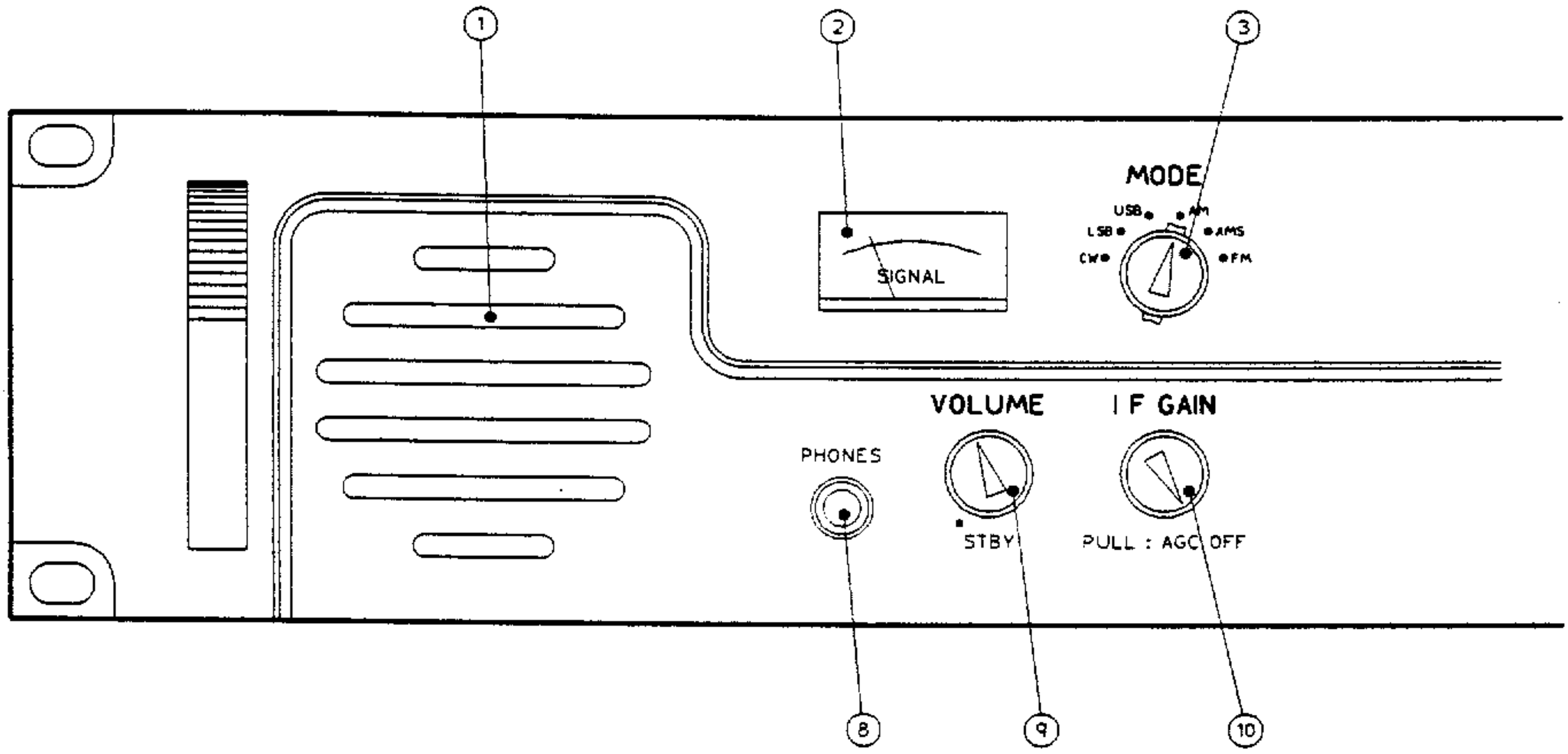

(1) Monitor Loudspeaker Reception monitor controlled by the volume control. This speaker can be disconnected by removing a link in the rear panel connector.

(2) Signal strength meter Calibrated S1 to S9 and 10dB, 30dB and 50dB above S9. The S9 signal strength is nominally 50 microvolts p.d. at the antenna socket.

(3) Mode switch Selects one of six available reception modes :-

- **CW** For reception of CW signals.
- **LSB** For single-sideband signals, (Lower sideband).
- **USB** For single-sideband signals, (Upper sideband).
- **AM** For reception of AM signals.
- **AMS** For AM reception with synchronous detector. (D-225 option).
- **FM** For reception of narrow-band FM signals. (D-225 option).

(4) AMS lock indicator The **L** symbol is illuminated when the synchronous detector is correctly locked to the received signal.

(5) Frequency display A 5-digit back-lit LCD showing the received frequency to the nearest kilohertz. Frequencies below 1700 kilohertz are shown directly and those above in megahertz, with a decimal point separating MHz and kHz.

(6) Main tuning knob For tuning the receiver and selecting memory channels. The rate of tuning is adjusted according to the receiver's mode and the speed of rotation of the tuning knob.

(7) Numeric keypad For entering receiver frequency directly and quickly selecting memory channels 1 to 10.

(8) Headphone socket A headphone output jack for a standard 1/4" plug. Mono or stereo headphones may be used (stereo phones operating in mono). Inserting a headphone plug disconnects the loudspeaker output.

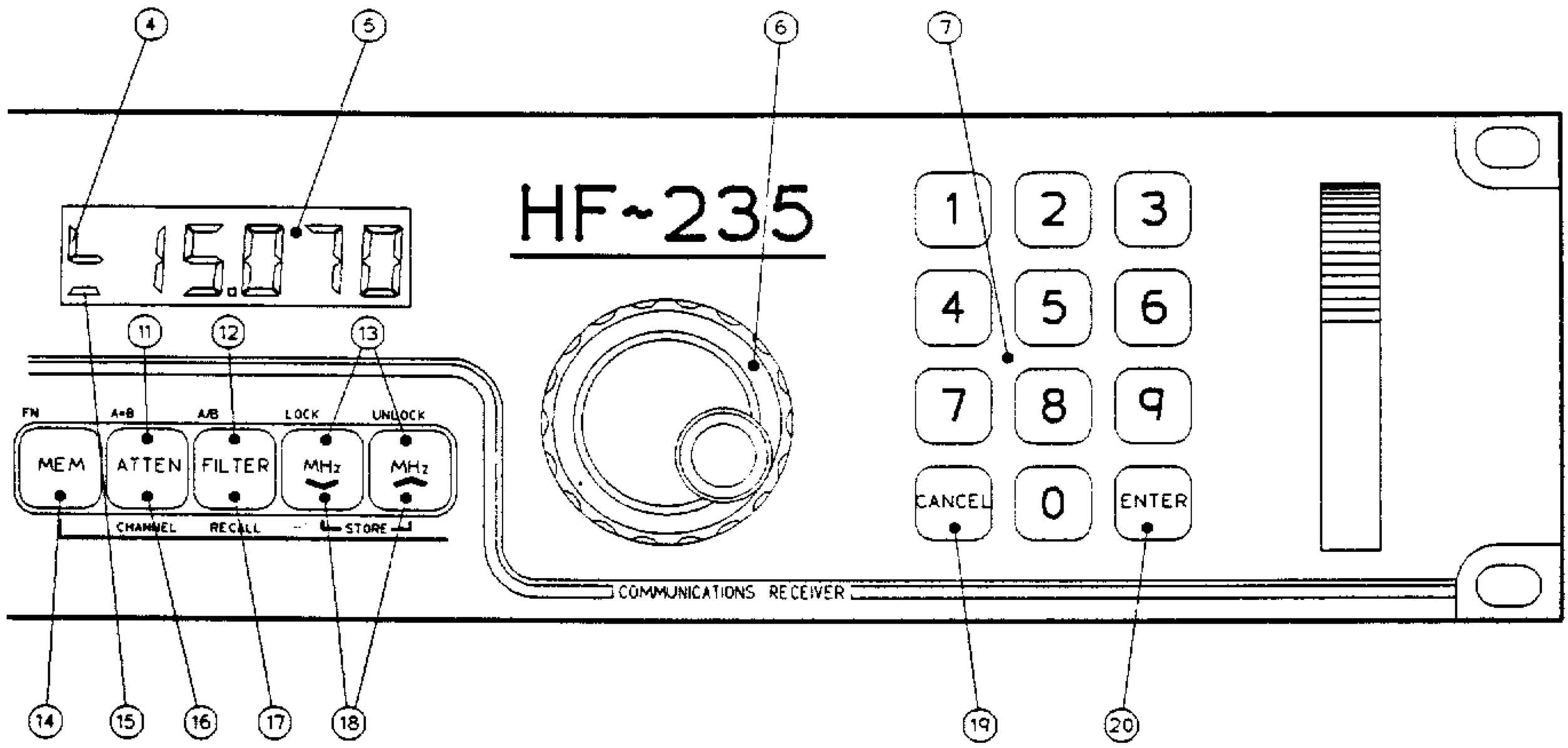

(9) Volume / Power Controls the volume in the loudspeaker and at the headphone output. When turned fully counter-clockwise to the click position, the receiver is switched to standby mode. (Note that the AC supply is not isolated from the power supply circuit in standby mode).

(10) I F Gain control This control operates in two modes; When pushed in it sets the maximum RF / IF gain threshold for the AGC system in the receiver. When pulled out it gives complete manual control of the receiver's RF / IF gain. For normal AGC operation, the control should be pushed in and turned fully clockwise.

(11) R F Attenuator Displays, and allows the user to change, the state of the aerial input attenuator. A fixed 20dB of attenuation may be switched in or out.

(12) Filter select Enables the receiver bandwidth to be displayed and changed. In LSB, USB, AM and AMS modes, four different IF filters are available :- 2.2, 4, 7 and 10kHz. In CW mode, two :- 2.2kHz and 200Hz (audio peak filter). In FM mode this control turns the squelch facility on and off.

(13) Megahertz tuning Steps the receiver in one-megahertz increments up or down the HF spectrum. The tuning will continue automatically if either of the buttons is held pressed, but will stop when the upper or lower frequency limit of the receiver would be exceeded.

(14) Memory mode select Switches the frequency display into memory mode and then selects memory preview mode. Turning the main tuning knob or pressing keys on the numeric keypad selects which memory is displayed. Pressing the memory select button again returns the display to frequency mode.

(15) Memory mode flag Is illuminated when the display is showing memory information.

(16) Memory channel mode In memory mode, switches channel monitoring on and off.

(17) Memory recall In memory mode, transfers a frequency from the selected memory to the receiver tuning.

(18) Memory store In memory mode, transfers the current receiver frequency into the selected memory, over-writing any previous content. Both store buttons must be pressed simultaneously.

(19) Cancel key Clears a partially entered frequency from the numeric keypad. In memory mode this key selects memory channel 10.

(20) Enter key This key terminates keypad frequency entry for frequencies between 30 and 3000 kHz. The receiver is tuned to the keyed-in frequency (kHz). In memory mode this key selects memory channel 20.

Tuning.

The HF-235 is tuned with a single rotary control (which drives a digital shaft encoder) giving continuous tuning over the whole of the receiver's range. There are no separate tuning bands on the HF-235, but for convenience two buttons, [MHz DOWN] and [MHz UP], are provided to tune in one-megahertz steps to a frequency near to the one of interest.

The frequency readout on the HF-235 is at the true carrier frequency in all modes of reception. It is at the centre of the filter passband in AM mode, and at the reinjected carrier frequency in USB and LSB modes. An 800 Hz offset from carrier is provided in CW mode, and a 1.9 kHz offset in FAX mode if this is installed. Although the frequency display changes in 1 kilohertz steps the receiver is actually tuned in much smaller steps. These are sufficiently small for tuning to appear to be continuous.

The rate at which the receiver tunes when the tuning knob is rotated depends on the mode selected and on the speed of rotation of the knob. All modes, with the exception of AMS, offer the facility of speed-up tuning - when the tuning knob is rotated rapidly the tuning rate increases. This allows a slow tuning rate for precise signal resolution coupled with the ability to reach the required frequency quickly.

The tuning rates adopted by the HF-235 are shown in the table below :-

Receiver Mode	Normal tune rate		Fast tune rate
	Tuning step	kHz per rev	
LSB, USB, CW, FAX	8 Hz	1.6	12 times faster
AM	50 Hz	9	10 times faster
FM	125 Hz	25	4 times faster
AMS	8 Hz	1.6	Only normal rate

When the operating frequency limits of the HF-235 are reached, tuning will stop. There are no mechanical stops on the tuning knob, but you will notice that the frequency display stops changing. The lower tuning limit is 30 kHz and the upper limit 29.999 MHz.

Tuning in AMS mode.

The synchronous AM detector used for AMS mode (with the D-225 option fitted) is not suited to search tuning - so this should be done with the receiver set in the normal AM mode. When a station has been tuned, the AMS mode can be selected, and the tuning control used to fine-tune the receiver until the detector locks to the signal and the **L** is shown in the top left corner of the frequency display. When AMS mode is selected it is likely that you will hear the signal with a superimposed tone. Slowly turn the tuning knob so that the pitch of the tone falls, and continue until the tone stops. Finally tune for the best clarity of reception. During severe carrier fading it is possible for the detector to unlock from the signal, causing a tearing sound. This effect can often be minimised by some judicious fine tuning.

Keypad frequency entry.

The numeric keypad allows frequencies to be entered directly as an alternative to using the tuning control. After a frequency has been keyed-in, the receiver can be tuned with the tuning knob in the usual way. Frequencies are entered in kilohertz, and as keys are pressed digits show on the frequency display. The receiver will only tune to the entered frequency when it is complete - either when sufficient digits have been keyed in or when the [ENTER] key is pressed. Frequencies above 3000 kHz will enter automatically as soon as the last digit is keyed. Those below 3000 kHz should be followed by [ENTER].

For example :-	[1]	[5]	[0]	[7]	[0]	tunes to 15.070 MHz
	[1]	[9]	[8]	[ENTER]		tunes to 198 kHz

Fractional kHz frequencies can be entered by keying just one digit (100 Hz) and pressing [ENTER]. This fraction is added to the whole kHz frequency on the display, although it is not shown itself.

For example :-	[8]	[5]	[4]	[ENTER]	[5]	[ENTER]	tunes to 854.5 kHz

An incorrect entry on the keypad can be corrected by pressing [CANCEL] after which the correct frequency can be reentered. Please note that once keypad frequency entry is started the other controls on the receiver will be inoperative until entry is completed or cancelled.

Modes and Filters.

The HF-235 receiver can resolve most signals commonly found in the HF radio spectrum. Operating mode is selected by a rotary switch on the front panel - standard modes available are CW, LSB, USB and AM. If the D-225 optional detector unit is added, then AMS and FM modes are also available. The HF-235/F receiver replaces LSB mode with FAX mode.

CW mode is used for reception of telegraphic Morse (classes A1A and A1B) and the receiver provides a frequency offset so that signals at the tuned frequency are resolved as an 800Hz tone. An audio peak filter, centred on 800Hz, can be switched in to reduce background noise using the [FILTER] button.

LSB and USB modes are for single sideband telephonic reception (class J3E, lower or upper sideband) and additionally most FSK and FAX transmissions (classes F1B, F1C and F3C) can be resolved in USB mode. The receiver frequency is that of the suppressed carrier, and the receiver's filter is offset by 1400Hz to accommodate audio signals from 200Hz to 2600Hz.

AM mode uses an envelope detector for broadcast transmissions with full carrier (classes A3E and H3E). AMS mode is for similar signals, but uses a phase-locked product detector which is less sensitive to carrier amplitude, and offers improved reception under carrier fade conditions. It will also successfully receive reduced carrier transmissions with one or both sidebands present.

FM mode allows reception of narrow-band frequency modulated signals (class F3E). The receiver bandwidth is fixed at 12 kHz in FM mode, but the [FILTER] button can be used to enable a noise-operated squelch system to mute the receiver's output in the absence of a signal. The squelch sensitivity is adjustable by a preset control on the rear panel of the HF-235.

FAX mode specifically tailors the receiver's audio response to FSK facsimile transmissions (classes F1C and F3C), and provides a frequency offset of 1900Hz for feeding to standard FAX receiving equipment.

Filter selection.

With the HF-235 receiver, it is possible to select different IF filter bandwidths to suit reception conditions. Wide filters can be used with strong signals to give good audio quality, and narrow filters can extract a signal from a crowded band. There are four IF bandwidths offered :- 2.2 kHz, 4 kHz, 7 kHz and 10 kHz, and additionally a 200 Hz wide audio filter for Morse Code reception.

Filters appropriate for normal conditions in each mode are selected when the receiver is first switched on :- 7 kHz for AM and AMS, and 2.2 kHz for USB, LSB, FAX and CW. The [FILTER] button allows this selection to be overridden. The filter last selected in each receiver mode is remembered, and then reselected when the mode is changed. LSB and USB share the same filter setting, as do AM and AMS.

Pressing the [FILTER] button changes the frequency display to show the current filter bandwidth (in kHz) and an **F** on the right-hand side indicating filter select mode. Each subsequent press of the button whilst the **F** is displayed will select a new filter in the order :-

2.2 ---> 4 ---> 7 ---> 10 ---> 2.2 etc.

The display will revert to frequency after about three seconds from the last press of the [FILTER] button. In CW mode only two filters are available, 2.2 kHz and 0.2 kHz. If the 0.2 kHz filter is selected, the 2.2 kHz filter remains in the IF, and the audio peak filter is switched in.

In FM mode there is only one fixed filter bandwidth of 12 kHz. The [FILTER] button serves to turn the squelch facility on and off, with the display showing the messages **SQL** or **OFF** as appropriate.

R F / I F Gain.

The RF and IF gain levels of the receiver are normally under automatic control, based on the incoming signal level. Manual control is provided to override the automatic settings in the event of unusual reception conditions or for special applications such as direction finding.

The front panel **I F GAIN** control in fact controls both IF and RF gain within the receiver. It can be used in conjunction with the automatic system (AGC on) or as a totally manual control (AGC off). The signal strength meter monitors the gain control line within the receiver, and so its readings will not necessarily reflect incoming signal strength when the AGC system is overridden. For fully automatic operation, the **I F GAIN** control should be fully clockwise and in its "pushed in" position.

The **I F GAIN** control can operate in two ways. When the control knob is pushed in (ie flush with the **VOLUME** control) it acts as a maximum gain limit to the AGC system. This can be beneficial during reception of SSB speech since it allows AGC action to control strong signal peaks, but prevents excessive background noise during pauses. When the control is pulled out the AGC system is switched off and receiver gain is totally under manual control. Care should be taken that signal quality is not degraded by overloading the IF system.

R F Attenuator.

An RF attenuator can be manually switched in to reduce the signal from the aerial reaching the input stages of the receiver. It should be used where a strong signal exceeds the range of the AGC system in the receiver, or when strong signals close to the one being received overload the receiver's input, and produce intermodulation products or cross modulation. The attenuator has a single fixed step of 20 dB.

Pressing the [ATTEN] button changes the frequency display to show the current attenuator status. There are two messages, either **OFF** or **ATTN**. If the button is pressed again whilst either of these show,

then the attenuator state will be changed. The display will revert to the receiver's frequency after about 3 seconds.

In addition to the manual attenuator there is an automatic attenuator in the input circuit which is activated by very strong RF signals at the antenna socket. Its purpose is to protect the receiver's input stages from damage, and it will respond to frequencies in the VHF and UHF regions as well as HF. Because of this circuit, the receiver can withstand up to 30 volts of signal at the antenna socket without damage. This attenuator switches out when the overloading signal is removed.

Memory operations.

The HF-235 has 30 memories which can store receiver frequency settings. Memory information is maintained by an internal battery independently of the main receiver supply. There are four memory functions - preview, recall, store and channel - controlled by buttons on the front of the receiver :-

Pressing [MEMORY] will show the memory mode flag in the display with a two-digit memory number (01 to 30). After about one second the display will change to indicate the frequency stored in that particular memory. This is the memory preview function. Turning the main tuning knob will display the memory number again and select different memories to preview. The receiver's tuned frequency is not affected whilst previewing memories, and the memory mode flag in the display indicates that the main tuning knob selects memories rather than tuning the receiver.

When in memory mode, the numeric keypad keys **[1]** to **[9]** will select memories 01 to 09 with a single keypress. These memories can be used to advantage for commonly required frequencies. Additionally [CANCEL] will select memory 10, [ENTER] will select memory 20 and **[0]** will review the current memory number.

After selecting and previewing a memory the store and recall functions can be used. Pressing [RECALL] retunes the receiver to the frequency in the selected memory and returns the display to frequency mode. Note that the receiver mode may need to be changed manually. Tuning the receiver after a memory recall will not affect the contents of the memory.

Pressing the two [STORE] buttons simultaneously will save the current tuned frequency in the selected memory, over-writing its previous contents. A message **STO** appears briefly on the display to confirm the operation.

Pressing [MEMORY] will return the receiver to normal tuning mode, with the received frequency on the display, unchanged.

The channel memory function is similar to the preview function, but instead of just displaying the frequency stored in a particular memory, the receiver is tuned to the memory immediately it is selected. Pressing the [CHANNEL] button switches between preview and channel functions.

The frequency that the receiver was tuned to before entering channel mode is not lost. To return to this frequency press [MEMORY]. To tune from the channel memory frequency instead, press [RECALL].

Special Functions.

There are four special functions labelled in red on the front panel of the HF-235. To obtain these, the [FN] (memory) button is pressed AND HELD whilst pressing one of the other buttons.

The four functions are :-

1) Set background (B) tuning store to the same frequency as the main tuning store (A).
   Press [FN] and [A=B].

2) Swap the frequencies in the background and main tuning stores.
   Press [FN] and [A/B].

3) Front panel control lock (disables tuning control and functions).
   Press [FN] and [LOCK].

4) Unlock (reverses above operation).
   Press [FN] and [UNLOCK].
   The front panel can also be unlocked by turning the mode switch.

The background tuning store is useful as a temporary frequency memory that can be quickly accessed and tuned. Typical uses include monitoring watch channels or alternative frequency outlets or an SSB communication net where transmitter frequencies differ slightly.

Operator notes.

Rear Panel controls and connections.

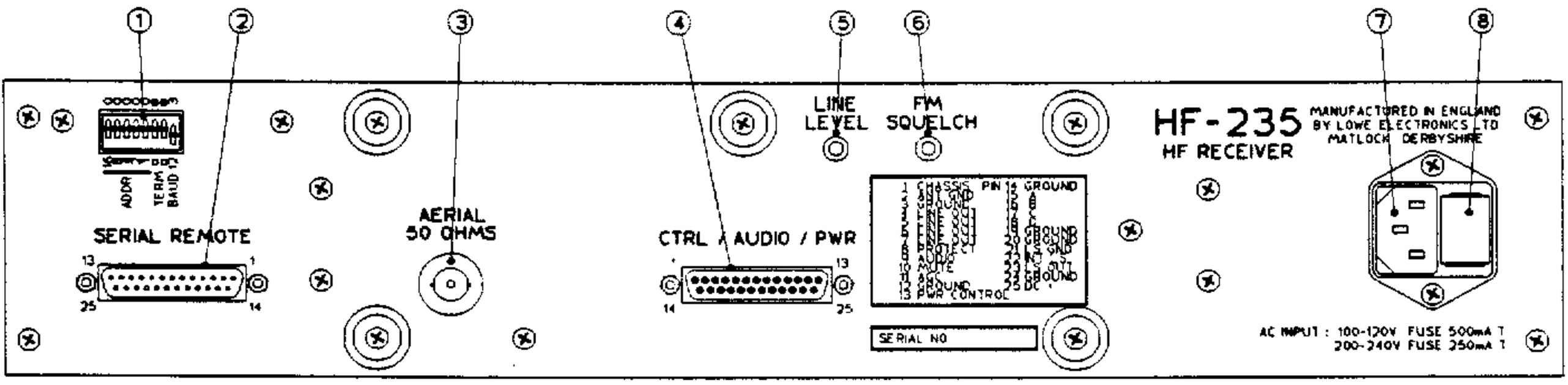

(1) Remote configuration switch

(Present if R-235 remote option is installed)
Used to set serial data rate and device address. Please see installation section for further information.

(2) Remote control connector

(Present if R-235 remote option is installed)
A 25-way, female, D-type connector providing an RS232C interface to a computer, terminal or modem to give remote control of receiver mode and frequency. Connection details are given in the installation section.

(3) Aerial connector

A BNC co-axial socket for the aerial input to the receiver. The impedance of this input is nominally 50 ohms, unbalanced, at the tuned frequency of the receiver. Note that the aerial ground (co-axial screen) is electrically isolated from the chassis of the receiver but is effectively connected at radio frequencies.

(4) Main connector

A 25-way, male, D-type connector providing all the control, audio and DC power connections to the receiver. For normal operation some of the pins on this connector need linking together - this is easily achieved with the supplied plug which should be inserted to provide the required connections.
A detailed list of pin connections is provided in the installation section of this manual, and on the rear panel of the receiver.
Broadly the available connections are as follows :-

Chassis, antenna ground and receiver ground bonding.

Audio output via isolated, balanced 600 ohm line.

Single ended, fixed level audio output.

Antenna protection circuit input / output.

Audio mute input.

Receiver I F gain control input / output.

Loudspeaker output and internal LS input.

DC power input and voltage range control.

Spare connections for special applications.

(5) Line output level control

Adjusts the signal level on the 600 ohm balanced line audio output. This level is independent of the front panel volume control setting, and will remain fairly constant if the receiver AGC system is not overridden by the manual I F Gain control.

(6) F M Squelch level control

Operates in conjunction with the D-225 detector option to set the noise threshold at which the squelch gate opens. The control is normally adjusted so that the receiver is just muted when no signal is present. An incoming signal will then open the squelch.

(7) AC Power connector

A C mains power inlet for 110 / 120 / 220 / 240 Volts with appropriate setting of the adjacent voltage selector. The connector complies with CEE22 / IEC 320 specification.

(8) AC Fuse and Voltage selector

The A C protection fuse and mains voltage selector are combined in the mains inlet socket. To replace the fuse or change the voltage selection unclip the fuse carrier by squeezing together the catches at the top and bottom. Voltage selection can be changed by removing and rotating the fuse holder in the carrier. The operating voltage is shown through a small window on the carrier. Use only the 110 and 240 volt positions - the 220 volt position is inoperative.

The mains fuse presses into the voltage selector holder. The other fuse position is not connected and may be used to hold a spare fuse. Be sure to fit a fuse of the correct rating - 250mA for 220/240 volt operation, or 500mA for 110/120 volt. A 20mm, anti-surge fuse, type T, should be used.

Remote operation.

This section deals with the commands sent to the receiver via its remote interface to control its operation. For details of the connections and electrical requirements please see the installation section of this manual, on page 19.

The receiver is designed to operate with a computer or a terminal over a full duplex serial line. A modem may be used where long-distance remote control is required. Communication protocol is controlled by special characters sent between the computer and the receiver. Each command to the receiver is sent as a command line, which is terminated with a carriage return <CR>. The receiver can accept characters within a command line at the maximum serial data speed, but needs time to execute the command. When it is ready to receive another command it sends a <prompt> character '*' to the computer. The receiver assumes that the computer can receiver characters at maximum serial data speed, but a delay command is available to allow for line turnaround or computer software to enable character receive routines. An echo command is provided for when the receiver is controlled from a dumb terminal.

Commands to the receiver can either cause a change in the receiver's state, or request information to be sent back to the computer. A command requesting information has a query '?' as its argument. If the receiver cannot recognise a particular command or its arguments it will return an error code to the computer, and the command will be ignored.

There are therefore three possible receiver actions following receipt of a command line :-

Change state as requested, then send a <prompt> to the computer.
Send information as requested, followed by a <prompt>.
Ignore the command, send an error code followed by a <prompt>.

The connection system of the HF-235 enables up to 32 receivers to be chained together on one serial data line, controlled from one computer interface. Each receiver has a unique address, and can be individually accessed with the select command.

Input data format :-

300 or 1200 baud, 8 bits, no parity, 1 stop bit.
(bit 7 is ignored in all character processing.)

Input line format :-

<prompt> <command> <argument> <CR>

where	<prompt>	A '*' is sent by the receiver to indicate it is ready to accept a command line.
	<command>	A three character command word.
	<argument>	A command specific set of letters or numbers.
	<CR>	A carriage return character.

Valid characters :-

Letters	'a' thru 'z' and 'A' thru 'Z'	
Numbers	'0' thru '9'	
Symbols	<point> '.'	
	<query> '?'	
Control chars	Backspace	<BSP> (08)
	Return	<CR> (13)
	Escape	<ESC> (27)

Ignored characters :-

Symbols	<space>
Control chars	All control characters except <BSP>, <CR> and <ESC>.

Command line processing :-

After the receiver sends a <prompt> character it enables its serial input and assembles incoming characters in a line buffer. All lower case letters are converted to upper case, and ignored characters are passed over. The line buffer can accept up to 15 characters.

If echo mode is enabled then all incoming characters are sent back to the terminal with the exception of <BSP>, <CR> and <ESC> which are treated specially. These characters also have a special effect on incoming character processing :-

<BSP>	Deletes the last character in the line buffer. (It is ignored if the line buffer is empty.) Echoes as a backslash '\'.
<CR>	Terminates command line input and starts command processing on the assembled line. No characters should be sent after the <CR> until the receiver has sent another <prompt>. Echoes as carriage return and line feed <CR> <LF>.
<ESC>	Clears the line buffer and sends <prompt>. Echoes as <CR> <LF>.

Command action :-

When a <CR> is received, one of the following actions is possible :-

The command is discarded, and the receiver waits for another command.	If the current SELECT address does not match the receiver's own address.
The command is decoded and an error condition detected. The error is reported by the receiver sending an error code. This is followed by a <prompt> and the receiver waits for another command.	The error condition is indicated by the error code number :- ERR <space> <n> <CR> <LF> where <n> is between 1 and 14.
The command is decoded and actioned. A <prompt> is sent and the receiver waits for another command.	The command action affects receiver settings or the value of a stored parameter.
The command is decoded and information is sent to the computer. This is followed by a <prompt> and the receiver waits for another command.	If the command argument is a <query> then no changes are made to the receiver's state, but one or more lines of information are sent, indicating the present value of receiver settings or parameters.

Commands :-

<CR>	Null command	No action taken, receiver sends another <prompt>. Use as an "Are you there ?" command.
DLY	Response delay	
	DLY	Turn delay on. (Receiver waits >200ms after <CR>
	DLY <t>	Turn delay on or off. before sending any characters.)
	DLY ?	Return delay condition, ON or OFF.
ECO	Character echo-back	
	ECO	Turn echo-back on.
	ECO <t>	Turn echo-back on or off.
	ECO ?	Return echo-back condition, ON or OFF.
FRQ	Receiver frequency	
	FRQ <d>	Set receiver frequency in kHz.
	FRQ ?	Return receiver frequency in <d> kHz.
INF	Parameter information	
	INF ?	Return current values of all receiver settings and parameters.
LOC	Front panel lockout	
	LOC	Lockout receiver front panel.
	LOC <t>	Lock or unlock panel.
	LOC ?	Return lock condition, ON or OFF.
MOD	Receiver mode	
	MOD <m>	Set receiver mode <m>.
	MOD ?	Return current mode <m>.

MUT	Mute audio output	
	MUT	Mute receiver audio output.
	MUT <t>	Mute or unmute output.
	MUT?	Return mute condition, ON or OFF.
PRT	Control port value	
	PRT <n>	Output value <n> to the control port.
	PRT ?	Return value <n> from control port. Port is 4-bits wide, values of <n> from 0 to 15.
RES	Reset receiver	
	RES	Reset receiver to power-on condition. Current select address remains unchanged.
RSS	Receive signal strength	
	RSS ?	Return current signal strength <n> in dBm. Values are in the range -120 to -10.
SEL	Select receiver	
	SEL <n>	Select receiver with address <n> and deselect all other receivers.
TYP	Receiver type	
	TYP ?	Return receiver type identifier, 'HF-235' or 'HF-235/F'.

Argument types :-

<d>	Decimal number	Free format positive number, optionally including a <point> and a decimal fraction field.
<m>	Mode designation	One of 'CW' 'LSB' 'USB' 'FAX' 'AM' 'AMS' 'FM'.
<n>	Natural number	One, two or three digit number in the range 0 to 255.
<t>	Truth value	One of '0' '1' 'OFF' 'ON'

Error codes :-

ERR 1	Command not recognised.	
ERR 2	Line buffer overflow.	More than 15 character preceded the <CR>.
ERR 3	Argument not expected.	
ERR 4	<query> expected.	Command requires a <query> to return information.
ERR 5	Excess characters in input.	
ERR 6	Invalid argument.	Argument does not match formats for command.
ERR 7	Non-numeric character.	Character other than '0' to '9' in number.
ERR 8	Number expected.	Command requires numeric argument (or <query>).
ERR 9	Number out of range.	
ERR 10	Mode not implemented.	FAX and LSB modes are model specific.
ERR 11	Mode designation expected.	Command requires mode type (or <query>).
ERR 12	Frequency out of range.	
ERR 13	Internal communication fault.	Often due to the front panel controls being operated while the command is processed. Try sending a reset command, then repeat the required operation.
ERR 14	Frequency expected.	Command requires frequency (or <query>).

General notes.

The HF-235 is a complex piece of electronic equipment, and it makes good sense to look after it. Install it in a well ventilated place, out of direct sunlight and as free from dust as possible. Cleaning the exterior of the receiver is very easy since the case is coated with a heavy duty epoxy paint finish, and the front panel is made from a polycarbonate material which is very scratch resistant. The panel legends are printed on the reverse side of the polycarbonate so they won't wear off in use. Obviously you should avoid spilling your coffee over the HF-235, and it won't last long if you leave it out in the rain. In other words keep the receiver dry.

It is intended to work at normal room temperatures, and hot or cold extremes of temperature may affect its proper function.

Remember to disconnect the receiver from the mains when it is not going to be used for some time as the internal power supply remains on when the front panel switch is in the standby position.

If there is an electrical storm in the vicinity it is sensible to switch off the receiver and disconnect any external aerial system from it, since potentially damaging voltages can be induced in a large aerial.

Finally, after unpacking your HF-235, please retain the carton and packing material. If you should ever need to transport the receiver it will survive the journey much better in the correct carton.

If there is a momentary power failure, or if you plug in the power connector whilst the receiver is switched on, you may find that the receiver does not receive, or fails to respond to its controls. The problem is caused by the microprocessor controller having "crashed". The fault can be rectified by switching the receiver off, waiting a few seconds, and then switching it on again - all should be well, but occasionally the frequency information in the memories may be garbled.

In the same way that high volume levels from the internal loudspeaker may cause microphonic effects, external shock or vibration can cause frequency fluctuations. Strange effects can also occur if the receiver is placed in a strong alternating magnetic field, for example in close proximity to a large mains transformer in another piece of equipment.

When tuning the HF-235 you will notice that the output will be muted for about half a second as you tune through the local oscillator range switching frequencies at 5.000, 11.000 and 19.000 MHz. This is quite normal and should not be taken as a fault. Also one other effect that you may notice when tuning the receiver in some parts of the band is a whining noise as the tuning control is rotated. It is caused by the data transfers inside the receiver being picked-up by the input circuitry and it is normally not audible above the noise and signals coming from the aerial connected to the receiver.

As in any receiver there are a few spurious signals generated internally, mostly at or slightly above the background noise level of the receiver. Again these signals are usually masked by aerial noise and rarely cause any degradation to reception of radio signals.

1) Mechanical Installation.

1.0 General.

The HF-235 receiver can be used as a stand-alone unit or mounted with other equipment in a 19 inch rack system. For stand-alone or desk top use, the receiver chassis is provided with adhesive rubber feet to provide a stable operating base. An accessory desk top case, the C-235, is recommended for ease of use since the controls are then positioned at a better height for the operator. The receiver is fastened into the desk top case by four screws through the front rack support holes.

When rack mounted, the HF-235 occupies a 2U (88mm) high space in a 19 inch rack. The adhesive feet on the bottom of the receiver may need to be removed to fit into some installations. In a fixed installation it is not necessary to support the rear of the receiver in the rack, but if the system must be able to withstand shock or vibration, if installed in a vehicle for example, then the rear edge should be restrained. The four M3 screws at the rear corners of the receiver can be used to attach additional brackets if needed.

1.1 Ventilation.

The receiver requires no special ventilation due to its low power consumption and dissipation. A small amount of heat, about 5 watts, is liberated from the rear panel so a slight temperature rise can be expected. There are no ventilation slots in the case of the receiver.

If the receiver is mounted with other equipment, care should be taken to ensure that excessive heat is not transferred to the receiver. The local ambient temperature should certainly not exceed 50 centigrade. The receiver will operate optimally at a constant temperature, and heating from other equipment will be detrimental to frequency stability.

1.2 Packaging.

Packing for shipping the receiver consists of protective polystyrene blocks, two layers of bubble-cell wrapping and a cardboard carton. The protective blocks should fixed to the receiver with adhesive tape in the positions shown below. They are necessary to prevent damage to the controls and connectors on the receiver.

Please note that the receiver should never be shipped when mounted in the C-235 desk-top case. Always remove the receiver and pack it separately.

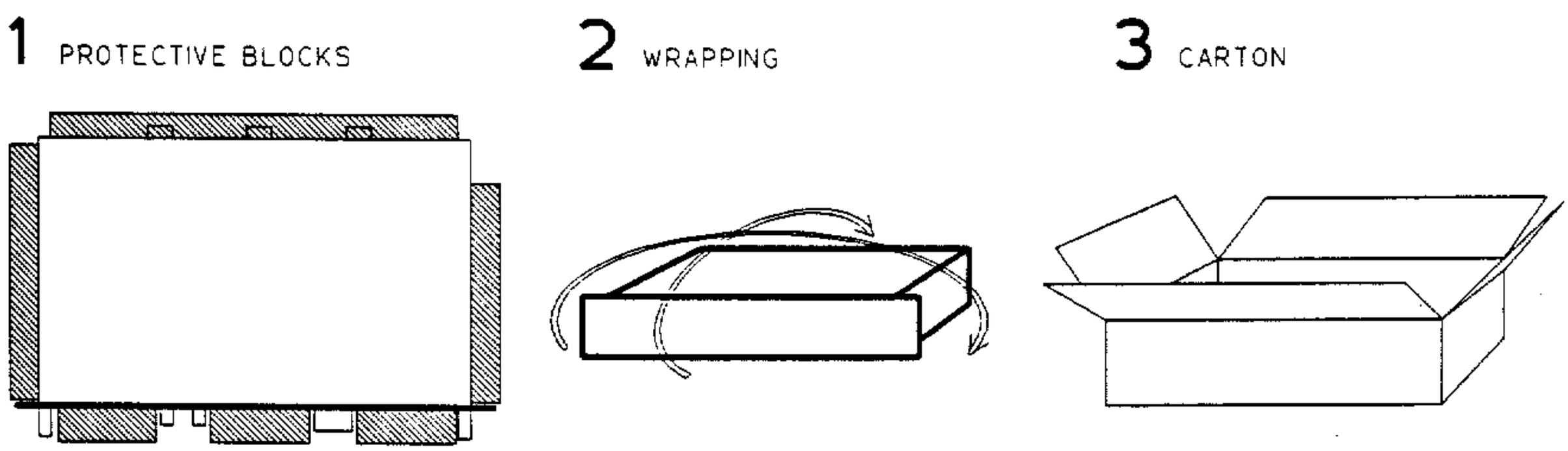

2) Power supply and Control Connections.

The HF-235 receiver can be powered from AC mains or from a DC power source. The AC mains connection is via an IEC standard inlet on the rear panel.

2.0 A C Power.

A three-core mains lead with the earth lead (yellow/green) connected to a protective earth system should be used when this receiver is operated from AC mains.

Adjacent to the inlet socket is the AC fuse and voltage selector. The fuse carrier unclips by squeezing the catches at the top and bottom together - then the carrier can be withdrawn. Voltage selection is made by removing and reinserting the fuse holder so that the appropriate indication is visible through the window in the carrier. Only the 110V and 240V settings are used - the 220V setting is inoperative. Fuses should be replaced only with the correct type - a 20mm type T anti-surge fuse, 250mA rating for 240V operation or 500mA rating for 110V operation.

2.1 D C Power.

DC power can be fed into the receiver through the 25-way male D-connector on the rear panel. The power supply circuit is designed to accept a wide range of input voltages from 20 to 40 volts. The input can rise to 60 volts without damaging the receiver, but prolonged operation at this voltage may cause overheating in the regulator circuit. Operation from 12 volt DC systems is possible with slightly reduced receiver performance. If the 12 volt supply is stable (eg a 12 volt accumulator) then direct connection to the receiver will be quite satisfactory. If the supply is noisy (eg a 12 volt vehicle supply) then internal regulation can be improved by linking together pins 12 and 13 on the 25-way connector. This link is not normally fitted because it reduces the receiver's internal supply voltage and compromises its audio and RF performance.

A 12volt accumulator can be used as a backup supply for a receiver normally connected to a mains supply - automatic change-over between mains and battery will occur without interrupting reception. If necessary a trickle-charge circuit can be built into the receiver.

2.2 Grounding.

The receiver has four isolated ground systems, making it suitable for marine installation and ensuring that mains earth loops are not present when it is connected to other equipment. All ground system connections are brought out to the rear panel connectors and may be linked if the installation requires. Note that isolation is only at DC - there are RF bypass capacitors between the ground systems inside the receiver. The maximum DC voltage between any two grounds should not exceed 50 volts.

The ground systems are :-

CHASSIS GROUND.
This is all of the case, and is connected to mains earth and pin 1 of the 25-way connector.

ANTENNA GROUND.
This is the screen of the antenna input, and is connected to pin 2 of the 25-way connector.

CIRCUIT GROUND.
This is the common ground connection of the receiver's circuit. The power supply, external loudspeaker and control signals all share this ground connection. It is connected to pins.3, 12, 14, 19, 20 and 24 of the 25-way connector. Pin 21 is also connected, but is reserved for external loudspeaker connection only.

REMOTE GROUND.
This is the ground on pin 7 of the remote control connector (if remote control option is fitted).

2.3 Control connections.

Some connections on the HF-235 are not required for normal operation, but are provided for interconnection with special equipment :-

PROTECT (pin 8)	Can be used as an input or an output. Grounding this pin causes the antenna excess power circuit to operate, forcing the antenna input to a high impedance state and attenuating the receiver's input. As an output, the voltage on this pin can be monitored (with an impedance of greater than 10 k ohms) - a 5volt output indicates normal antenna connection, no output indicates that the antenna protection circuit is operating.
MUTE (pin 10)	A voltage applied to this input (5 to 12 volts) will mute the receiver's audio output. The input should not be pulled low externally, so connection is recommended via a diode.
AGC (pin 11)	A direct connection to the receiver's gain control line - can be used to monitor, and in special cases control, the RF and IF gain of the receiver. At maximum receiver gain this pin is at approximately 2.5 volts, the potential falling to below 2 volts at minimum gain.
SPARE (pins 15 to 18)	Spare connections from internal wiring points. These can be used to provide non-standard signals or supply power to external equipment.

3) Audio Output.

The HF-235 provides four audio outputs :-

LOUDSPEAKER	A loudspeaker output is provided on the 25-way connector pins 21 and 22 suitable for driving 4 or 8 ohm loudspeakers. The front panel volume control operates on this output. The internal monitor loudspeaker is connected via the 25-way connector so that it may be disabled. Pins 22 and 23 should be linked for the internal speaker to operate.
HEADPHONE	A front panel jack socket allows connection of mono or stereo headphones of any impedance. Insertion of a plug into the headphone socket disconnects the loudspeaker output on the rear panel.
MONITOR	A high-quality, direct coupled, unbalanced audio output is available on pin 9 of the 25-way connector. Pin 20 provides a suitable ground for this signal. The level is fixed at about 200 mV for a normally modulated RF input, from a source impedance of 5 k ohms.
LINE	A balanced, floating, 600 ohm line output is available on pins 4, 5, 6, and 7 of the 25-way connector. The secondary of the line driving transformer is split - the windings being connected to pins 4 & 5 and 6 & 7. A series configuration provides 600 impedance, so for normal use pins 5 and 6 should be linked, and the line connection taken from pins 4 and 7. The split winding allows the use of the audio line for DC control. The level of the line output is adjustable with the rear-panel control - it is not affected by the front panel volume control.

25-way Connector.

The connector is a 25-way, D type plug. A suitable free connector with pins 22 and 23 linked is supplied with the receiver. This should be plugged into the rear panel for normal receiver operation.

Pin	Signal	Function
1	CHASSIS	Ground link pin for receiver case and mains earth.
2	ANT GROUND	Ground link pin for antenna screen.
3	GROUND	Link pin for receiver circuit ground.
4	LINE A1	Audio line output winding A
5	LINE A2	(Link pins 5 & 6 for 600 ohm output
6	LINE B1	on pins 4 & 7)
7	LINE B2	Audio line output winding B
8	PROTECT	Antenna protection input / indication.
9	AUDIO	Fixed level audio output.
10	MUTE	Audio mute input.
11	AGC	Receiver IF / RF gain level.
12	GROUND	
13	PWR CONTROL	Link to pin 12 for low supply voltage operation.
14	GROUND	
15	SPARE A	
16	SPARE B	
17	SPARE C	
18	SPARE D	
19	GROUND	
20	GROUND	
21	LS GROUND	External loudspeaker ground.
22	INT LS	Link to pin 23 for internal monitor loudspeaker.
23	LS OUT	External loudspeaker output.
24	GROUND	DC supply negative connection.
25	DC SUPPLY	DC supply positive connection.

4) Antenna Connection.

A BNC socket provides the 50 ohm, unbalanced antenna input to the receiver. The screen of the antenna connection is isolated from the chassis and circuit ground of the receiver (see 'Grounding' above) although it may be connected by linking pins 1, 2 and/or 3 of the 25-way connector if a static discharge path is required.

The input circuit contains an RF monitor to protect the receiver from high level signals induced in the antenna system, for example if it is co-sited with an r/t transmitter. When excessive signal levels are detected, the input circuit attenuates the receiver input by about 20 dB and increases the antenna input impedance to about 500 ohms. In this condition the receiver will withstand an RF input of 30 volts indefinitely, and greater overloads for short periods. The protection circuit restores normal operation automatically, after a few milliseconds delay, when the overload is removed.

5) Remote Control Connection.

5.0 Protocol.

When the remote control option is fitted to the HF-235 an additional 25-way D socket and an 8-position DIL switch for serial data connection and configuration. The connection standard is based on the RS232C configuration, with some additional features to allow parallel connection of receivers on a bus system.

Serial remote connector details :-

Pin	Signal	I/O	Function
1	CHASSIS		Protective ground connection.
2	TXD	Input	Serial data in to receiver.
3	RXD	Output	Serial data from receiver.
4	RTS	Input	Data input enable.
5	CTS	Output	Send data enable to remote controller (Always high).
6	DSR	Output	Receiver ready (Always high).
7	GROUND		Signal ground.
8	DCD	Output	Always high.
9 to 25	No Connection		

Output voltages swing between +10 and -10 volts on the RXD line, with -10V representing a mark, or '1' condition. The output can be internally switched to a high impedance state when a receiver is de-selected, permitting a common bus connection of the outputs. An internal high value resistor forces the line to a mark condition to prevent spurious data reaching the controller during receiver selection changeover. All of the control line outputs are connected to +10V through diodes and resistors.

Input voltages should be between +25 and -25 volts, with the logic level transition at +1.5 volts. This allows compatibility with RS232, RS423 and TTL voltage levels. The TXD data input assumes a low voltage level is a mark or '1', the RTS input requires a high voltage to enable data input.

The interface is suitable for connection by a four-wire or two-wire scheme to a controlling computer or modem. Typical connection details are shown on the next page. Note that pin 4 (RTS) must be taken high before the receiver will process any incoming data. This high level can be derived from the controller or can be provided from the receiver by linking pins 4 and 5. When data is transmitted via a modem link, RTS is best sourced from a line that is asserted when the modem detects carrier. This prevents the receiver responding to data generated from noise on an un-driven audio line.

A 'ready' signal from the receiver to the controller can be derived from pins 5, 6 or 8. This signal will be high whenever the receiver is switched on. In a bus arrangement of several receivers these pins may be linked, and then the ready signal will indicate that one or more is switched on.

For correct RS232 operation the TXD and RTS inputs should be terminated. This is achieved by placing the two configuration switches labelled 'TERM' to the on (up) position. With these switches off the inputs have a high impedance suitable for bus connection. When several receivers are linked only one pair of TERM switches should be on.

5.1 Data Format.

The interface can operate at two data rates, 300 or 1200 baud, selectable by the position of a configuration switch. The word format is 8 data bits, no parity bit, one stop bit.

5.2 Configuration switches.

The eight interface configuration switches set the receiver address, data rate and line termination characteristics.

The address is relevant when several receivers are connected together on a serial bus, and operates in conjunction with the SEL command. All receivers should be set to unique addresses to allow data to be routed to individual sets. If a single receiver is controlled, then its address should be set to zero, since it will then default to a selected condition when it is switched on, and no special selection commands will be necessary.

Five switches configure the address, which is the sum of the binary values printed by the switch positions. Switches in the down position contribute the appropriate value - those in the up position make no contribution. For example, to set an address of 11 (eleven) the sum of values 8, 2 and 1 is required, so the corresponding switch positions are :- 16/up 8/down 4/up 2/down 1/down.

The two termination switches should be in the up position for single receiver control, and for the last receiver on a serial bus line. Any other receivers on a bus should have the termination switched off (switches down).

The data baud rate switch should be set to '12' for 1200 baud or '3' for 300 baud, as required by the controlling system. All receivers on a serial bus must be set to the same baud rate.

5.3 Typical connection arrangements.

4-LINE CONNECTION SCHEME

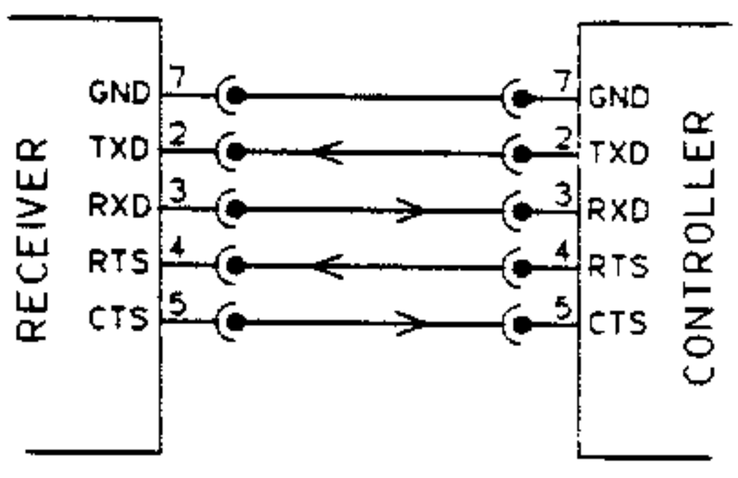

2-LINE CONNECTION SCHEME

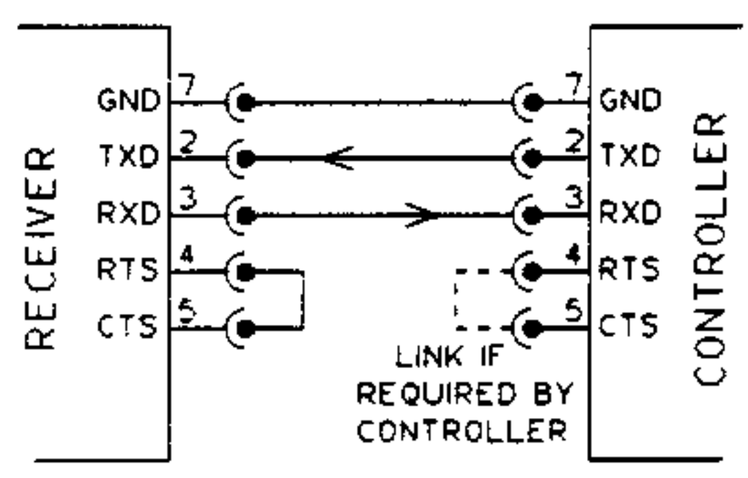

TYPICAL BUS CONNECTION

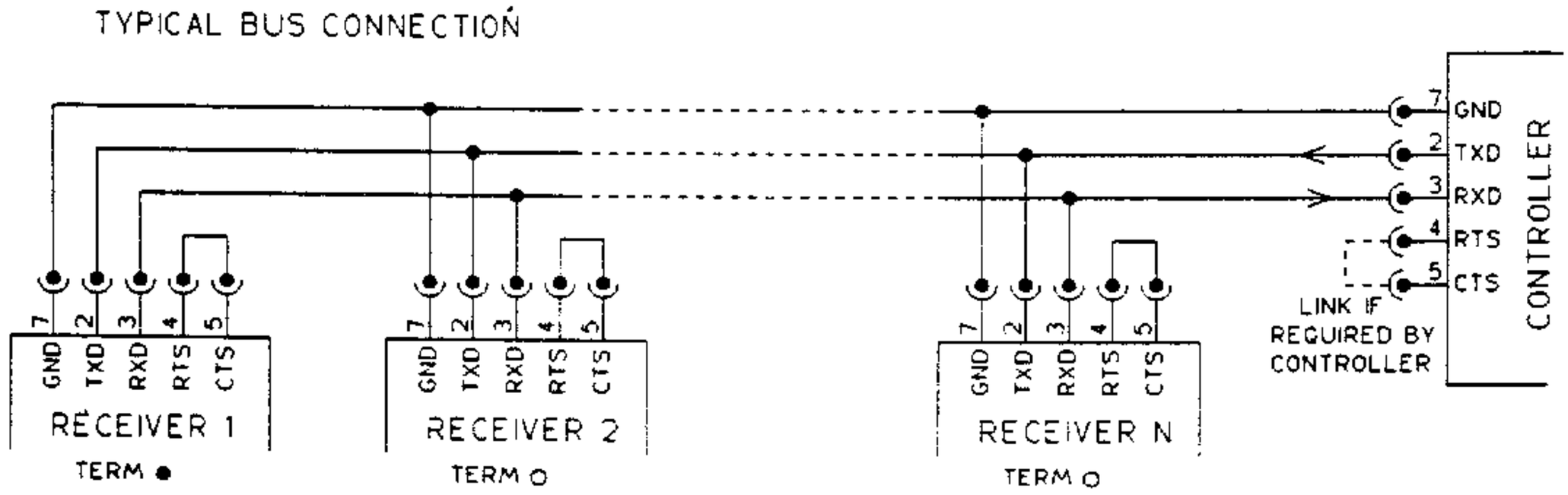

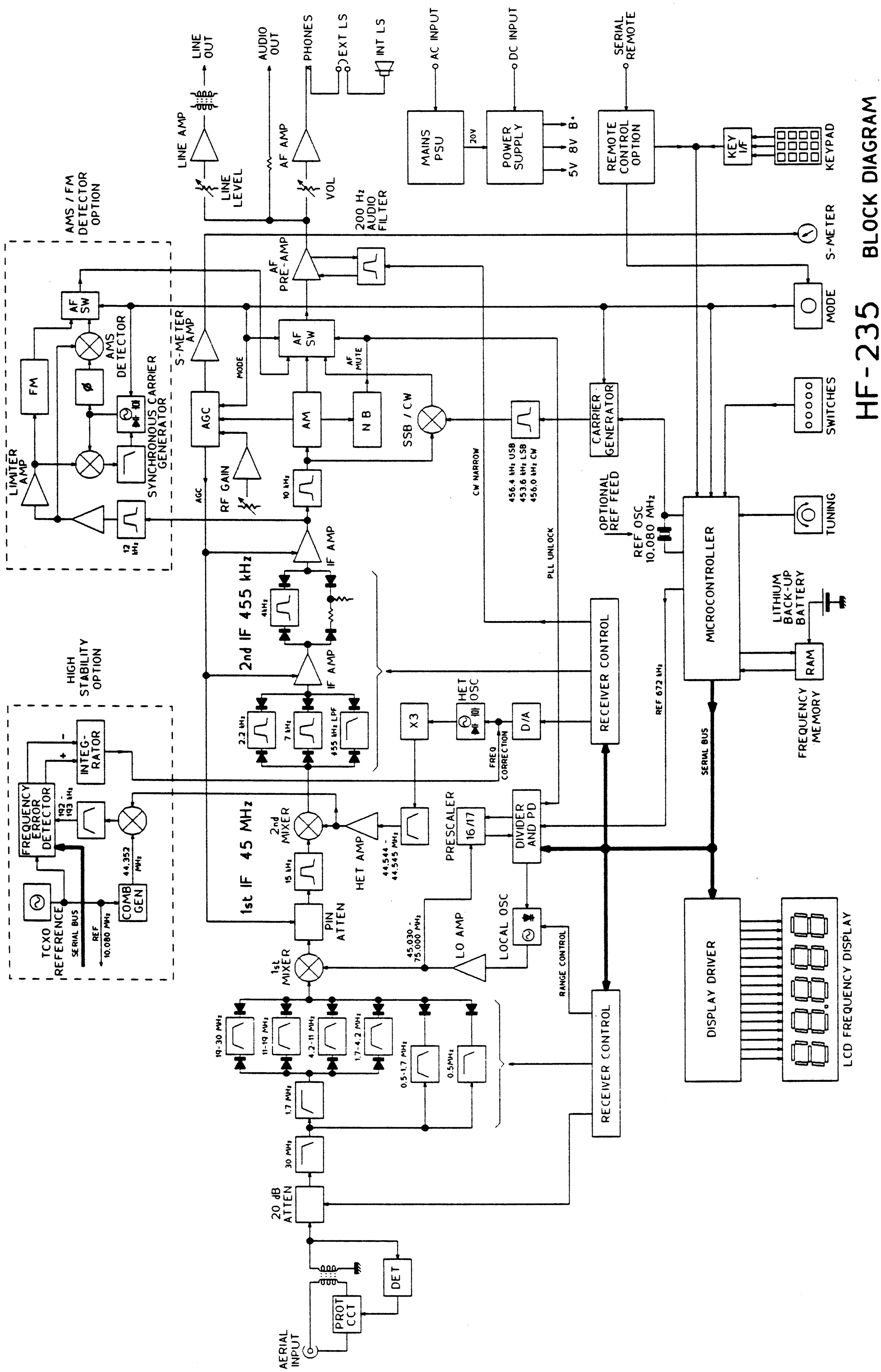
HF-235 BLOCK DIAGRAM
AMS / FM DETECTOR OPTION
HIGH STABILITY OPTION
LINE OUT
AUDIO OUT
PHONES
EXT LS
INT LS
AC INPUT
DC INPUT
SERIAL REMOTE
LINE AMP
LINE LEVEL
AF AMP
VOL
200 Hz AUDIO FILTER
MAINS PSU
20V
POWER SUPPLY
5V 8V B+
REMOTE CONTROL OPTION
KEY I/F
KEYPAD
S-METER
MODE
SWITCHES
TUNING
AF PRE-AMP
AF SW
AMS DETECTOR
S-METER AMP
FM
Ø
SYNCHRONOUS CARRIER GENERATOR
LIMITER AMP
12 kHz
AGC
MODE
AF MUTE
AM
NB
SSB / CW
RF GAIN
10 kHz
IF AMP
2nd IF 455 kHz
4kHz
2.2 kHz
7 kHz
455 kHz LPF
CW NARROW
456.4 kHz USB
453.6 kHz LSB
456.0 kHz CW
PLL UNLOCK
CARRIER GENERATOR
OPTIONAL REF FEED
REF OSC 10.080 MHz
MICROCONTROLLER
LITHIUM BACK-UP BATTERY
RAM
FREQUENCY MEMORY
RECEIVER CONTROL
REF 672 kHz
SERIAL BUS
X3
HET OSC
D/A
FREQ CORRECTION
INTEG-RATOR
FREQUENCY ERROR DETECTOR
192 - 193 kHz
44.352 MHz
COMB GEN
TCXO REFERENCE
SERIAL BUS
REF 10.080 MHz
1st IF 45 MHz
2nd MIXER
15 kHz
HET AMP
44.544 - 44.545 MHz
PRESCALER
16/17
DIVIDER AND PD
PIN ATTEN
1st MIXER
45.030 - 75.000 MHz
LO AMP
LOCAL OSC
RANGE CONTROL
DISPLAY DRIVER
LCD FREQUENCY DISPLAY
19-30 MHz
11-19 MHz
4.2-11 MHz
1.7-4.2 MHz
0.5-1.7 MHz
0.5MHz
1.7 MHz
30 MHz
20 dB ATTEN
RECEIVER CONTROL
DET
PROT CCT
AERIAL INPUT

Circuit description.

1) RF and IF section.

1.0 Frequency configuration.

The HF-235 is a dual-conversion superheterodyne receiver, using intermediate frequencies of 45 MHz and 455 kHz in its two IF stages. R F signals are converted to 45 MHz by the local oscillator signal (LO) which is tuned from 45.030 MHz to 79.999 MHz to give 30 kHz to 30 MHz receiver coverage. The local oscillator is tuned in 1 kHz steps.

Conversion between the two IF's is by the heterodyne oscillator signal (HET) which is tuned over a 1 kHz range between 44.544 and 44.545 MHz. The frequencies of LO and HET are varied together by the microcontroller to give continuous receiver tuning.

The filters in the 2nd IF are centred on 455 kHz. This frequency corresponds to the tuned frequency in AM and FM modes, but the IF is offset by 1.4 kHz above or below 455 kHz in SSB mode so that only the correct sideband signals pass through the filters. The offset is provided numerically within the microcontroller program.

SSB mode audio is derived by mixing the final IF with a carrier reinsertion signal (CAR). The frequency of this reflects the IF offset, ie 456.4 kHz in USB mode and 453.6 kHz in LSB mode. In CW mode the IF is offset by 200 Hz towards the upper sideband and the CAR frequency is 456.0 kHz to give an 800 Hz audio tone at the tuned frequency.

Because the local oscillator frequency is higher than the 1st IF, the RF frequency spectrum is reversed in both IF stages, so an increase in signal frequency produces a corresponding decrease in intermediate frequency.

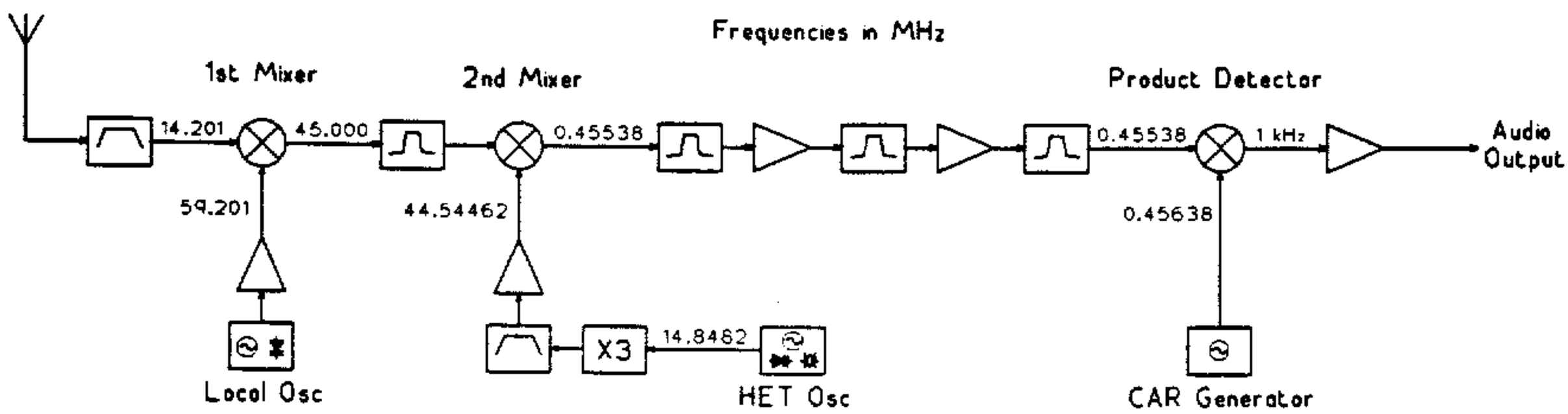

Oscillator and IF frequencies with the receiver tuned to 14.200 MHz, USB.

The following diagrams show the relationship between tuned frequency, IF filter centre frequency and carrier reinsertion frequency for each mode.

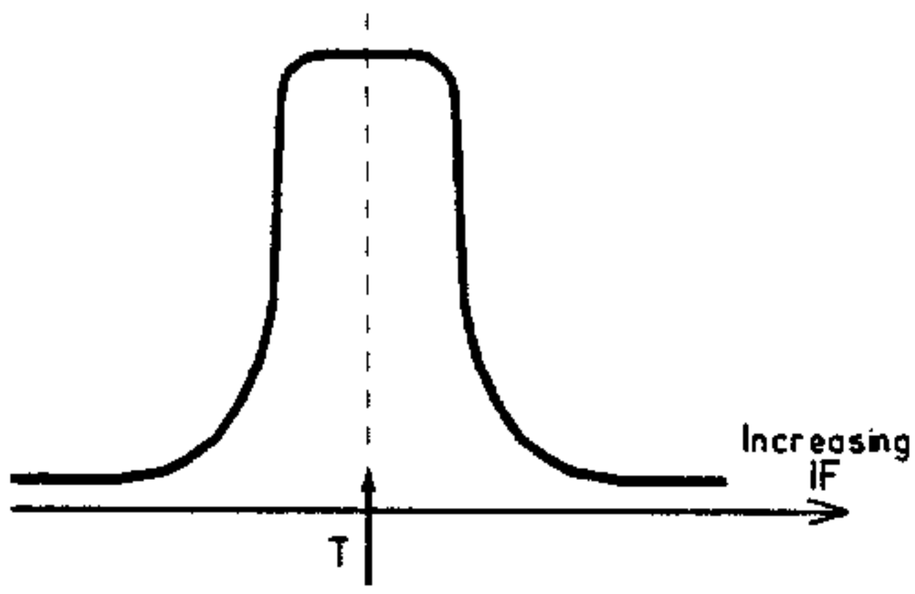

AM and FM modes:

Tuned frequency (T) in centre of filter passband.

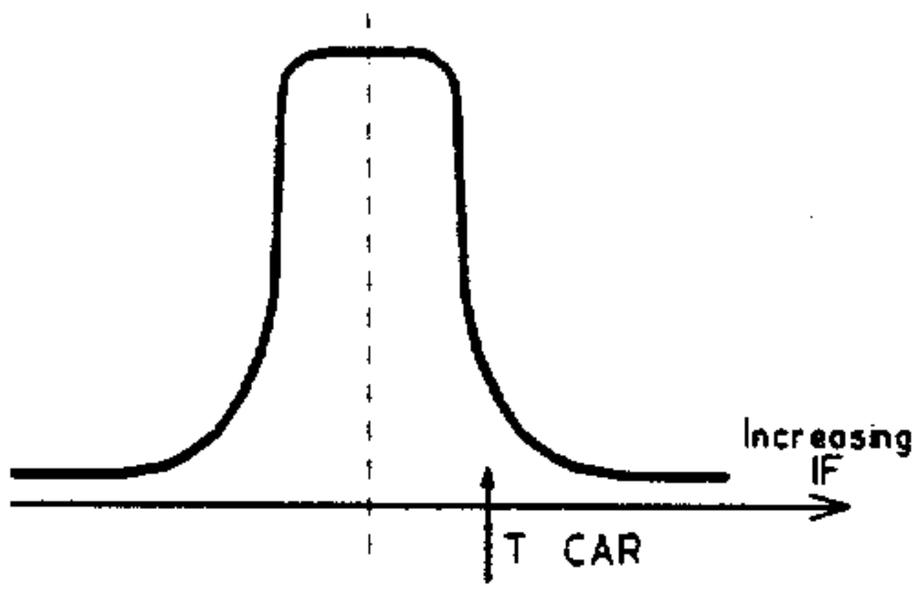

USB mode:

Tuned frequency (T) offset by -1.4 kHz.
Carrier reinsertion (CAR) offset by +1.4 kHz.

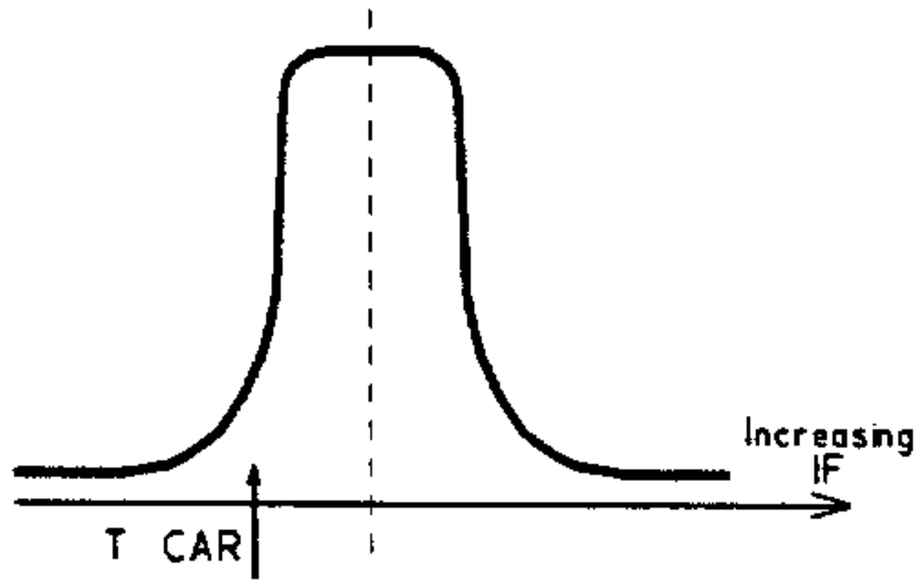

LSB mode:

Tuned frequency (T) offset by +1.4 kHz.
Carrier reinsertion (CAR) offset by -1.4 kHz.

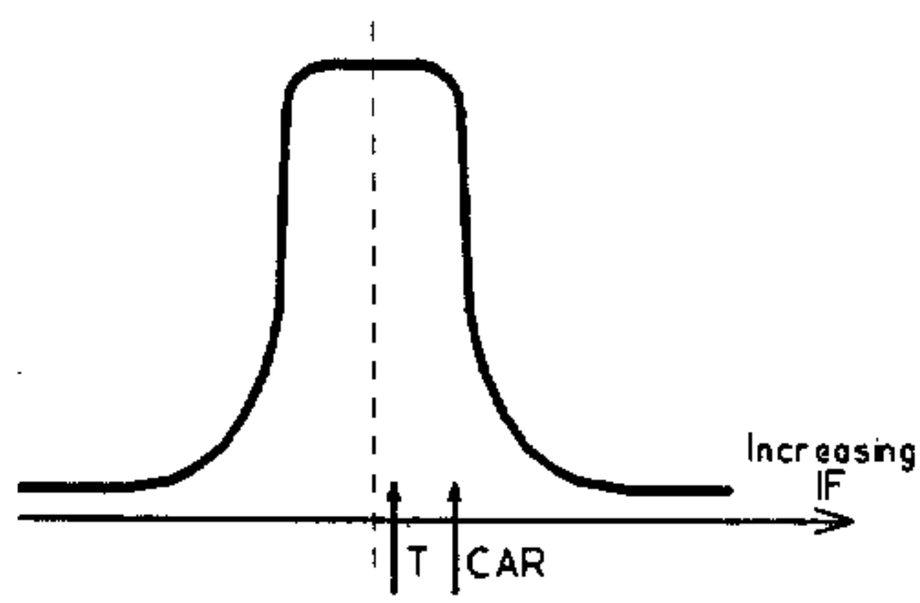

CW mode:

Tuned frequency (T) offset by -200 Hz.
Carrier reinsertion (CAR) offset by +1.0 kHz.

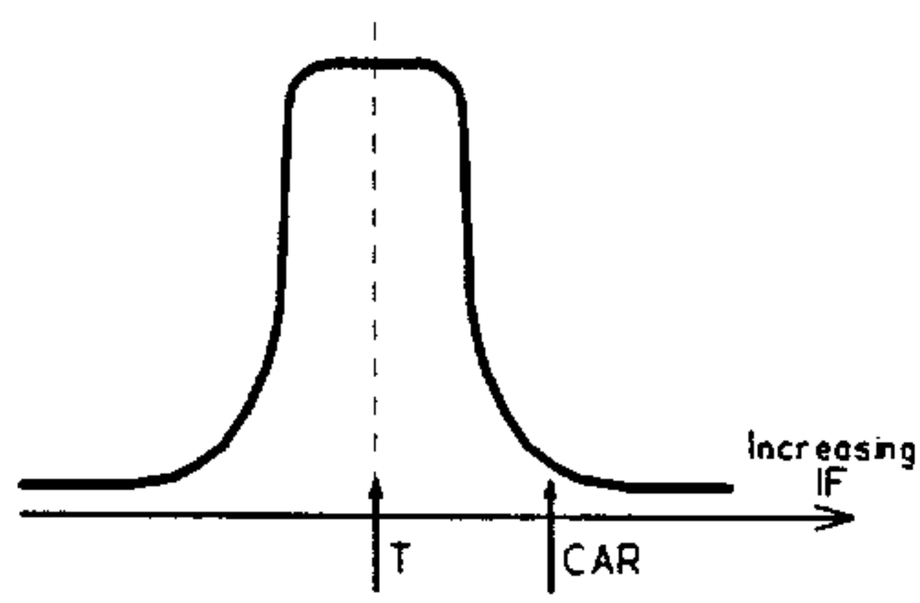

FAX mode:

Tuned frequency (T) at filter centre.
Carrier reinsertion (CAR) offset by +1.9 kHz.

1.1 Input protection.

The antenna protection circuit utilises active switching to be able to withstand prolonged overload that may exist if the receiver is co-sited with a transmitter. The antenna input is coupled to the receiver RF filters through a 1:1 transformer, T501, which has a 400 ohm series resistance connected in the primary. Under normal reception conditions the resistance is shorted by relay RL501, but during overload or when the receiver is switched off the resistance is present in the antenna circuit. This presents a high impedance at the antenna socket, reducing input power into the receiver and dissipates most of this power in the series resistance.

An RF detector R505 / D505 / C503 and threshold trigger Q501 form the protection trip circuit which releases the relay when excessive RF is detected. Hysteresis in the trigger level and a resume delay prevent the relay from chattering. The brief overload present at the receiver input before the relay operates is absorbed by saturation in the input transformer and conduction of diodes D501 to D504.

1.2 Input attenuator and band-pass filters.

After the protection circuit and input transformer signals from the antenna pass through the relay-switched attenuator formed by R1 / R2 / R3. The attenuator is bypassed if RL1 is closed, or gives about 20 dB signal reduction if RL2 is closed. Frequencies above 30 MHz are attenuated by the low-pass filter L1 / L2 / C1 / C2 / C3, then signals below 1.7 MHz are separated by the duplexer L21 / L22 / C25. For frequencies above 1.7 MHz, the signal passes through one of four band-pass filters, covering 1.7 to 4.2 MHz, 4.2 to 11 MHz, 11 to 19 MHz and 19 to 30 MHz. Frequencies below 500 kHz have a separate low-pass filter L25 / L26 / C29. These filters all help to reduce spurious mixing effects caused by strong signals outside the frequency band being received.

The appropriate filter is switched into circuit by diodes at the input and output. The control system drives one filter select line low (to ground) whilst holding the others at B+ (about 15V), causing one pair of diodes to conduct, with the remainder reverse-biased. Frequencies below 1.7 MHz are selected only at the output of the filters, and D10 is present to prevent attenuation of signals below 500 kHz by the 0.5 to 1.7 MHz duplexer section. Current for the filter switching diodes first passes through one of the attenuator relay coils, selected by Q5 or Q6.

1.3 1st mixer and 1st IF.

An SL6440 integrated circuit, transistor tree mixer is used to convert the RF signal to the first IF at 45 MHz. Transformer T2 provides a balanced signal feed to the mixer, and the balanced output is matched to the crystal filters X1a and X1b by a tuned transformer T3. Tuning adjustment is provided by TC1. In this configuration the mixer provides enough gain to remove the requirement for a separate RF amplifier stage, and offers more than 90 dB of intermodulation-free dynamic range.

AGC is fed back from the detector stage, via current control Q7, to a PIN attenuator diode D15. This controls the gain of the mixer and thus the RF gain of the receiver.

1.4 2nd mixer and 2nd IF.

The second IF section is a cascade of three filters, interspersed with two amplifier stages. There are no adjustments in this section. The IF at 455 kHz is produced by the second mixer, which is also an SL6440 IC, but it is operated at a much reduced current compared to the first mixer. The 15 kHz bandwidth of the first IF filter reduces the dynamic range requirement of the second mixer.

The second mixer output is applied directly to the first group of filters; one of three is selected by the control system. Diode switching passes the signal through either the 2.2 kHz filter (X2), the 7 kHz

filter (X3), or through a 500 kHz low-pass filter (C63 / C64 / L34) when the appropriate IF filter select line goes to 5V.

Both of the IF amplifier stages are contained in the SL6700 detector IC, Q5. AGC control to these amplifiers is provided within the integrated circuit. A 4 kHz filter (X4) or a direct connection can be placed between the two amplifiers, again controlled by diode switching. Finally a 10 kHz filter (X5) comes after the second amplifier and before the AM and SSB detectors. A 12 kHz filter is used in place of X5 before the FM and synchronous AM detectors.

IF filter selection is as follows:-

Selected IF bandwidth	1st IF Filter	2nd IF Filter 1	2nd IF Filter 2	2nd IF Filter 3
2.2 kHz	15 kHz	2.2 kHz	4 kHz	10 kHz
4 kHz	15 kHz	7 kHz	4 kHz	10 kHz
7 kHz	15 kHz	7 kHz	Thru	10 kHz
10 kHz	15 kHz	500 kHz	Thru	10 kHz

1.5 Detectors and AGC system.

The SL6700 IC contains the AM and SSB detectors, the AGC system and an impulse noise blanker. A full-wave envelope detector provides the AM audio output and feeds an IF signal level to the AGC system. The AGC time constant is provided by C86 and C87 in all modes, and additionally C88 is switched in by Q12 in AM mode to provide slower attack and decay. Transistors Q9 and Q10 provide a fast AGC attack for SSB mode, but this is disabled by Q11 during noise impulses and when the local oscillator is tuning between required frequencies. The AGC voltage is used to drive the S-meter after inversion and amplification by a section of Q24. Diode D40 expands the meter scale for large signals, and VR1 is the S-meter mid-point adjustment.

The noise blanker is triggered by noise spikes about 12 dB above the normal IF level. R54 and C84 determine the blanking period, which is about 0.5 ms. The blanking pulse is fed to the audio muting gate via D28.

1.6 Optional detector unit.

The optional FM and synchronous AM detector is based around the MC3357 narrow-band FM IF integrated circuit. This contains limiting amplifiers and a quadrature FM detector along with a squelch circuit - diodes D1 and D2 rectify the output of an active noise filter to produce a voltage representing the level of audio noise. If this exceeds a level preset by the squelch control then the receiver is muted.

In AMS mode, the resonator X3 provides a narrow range VCO to generate a carrier signal. The mixer inside the MC3357 is used to phase-lock this VCO to the incoming signal after it has passed through a limiting amplifier. Trimmer TC1 adjusts the oscillator centre frequency to 455 kHz. The oscillator signal is fed to mixer Q5 after a 90 degree phase shift, so that the mixer can correctly detect an AM signal. The mixer output is filtered by R29 / C28 to remove the IF component leaving the AMS audio signal.

The FM / AMS audio switching is done by Q10, a CMOS switch, whilst Q7 and Q8 provide switched 8V supplies to the detector stages. Logic circuit Q6 controls supply switching, the squelch enable (FMS) and the audio gate (MUT). Transistor Q9 detects if an audio beat-note is present on the output of the phase-detector (indicating that the AMS detector is out-of-lock) and controls the LCK signal to the front panel lock indicator.

1.7 AF stages.

Audio switching between the SSB and AM detectors is carried out by a CMOS switch Q27. SSB audio from the product detector is buffered by Q23 before the switching circuit. Op-amp Q24 amplifies the audio signal and Q22 provides audio muting at this point. A further section of Q24 acts as a second amplifier that can be switched to a band-pass filter by two further sections of switch Q27. This filter has a -6dB bandwidth of about 200 Hz, centred on 800 Hz, and is used for the narrow CW filter.

The preamplifier output is fed to the audio output connection at a constant level, via the volume control to the AF amplifier, and via the line level control to the line amplifier. Both output amplifiers are fed from the 15V, B+ supply to maximise available audio output power.

1.8 Power supply.

Four supply rails are used in the receiver:-

5 Volts for the logic and control system, 455 kHz IF amplifiers and signal switching.

8 Volts for the 45 MHz IF stages, the PLL system and HET oscillator, and the audio preamplifier.

6 Volts specially regulated and smoothed for the local oscillator and buffer amplifiers. (Derived from the 8V supply via Q21).

A partially regulated supply between 10V and 15V (B+) for the first mixer and the audio amplifiers.

The 8V and 5V supplies are provided by regulators Q32 and Q33 from the B+ supply. A low voltage drop regulator (LM2930 series) is used for the 8V rail to give a stable supply under battery operation when B+ may only be 10V. A large part of the receiver's current consumption is on the 5V supply, and the display illumination LED's are connected between B+ and 5V to take advantage of the voltage drop across the regulator. Transistor Q202 maintains a constant LED brightness.

The mains input is filtered, transformed, rectified and smoothed to give and unregulated supply of about 20V. This is then combined with any external DC supply via diodes D513 and D514, so that the highest voltage supply takes preference. Fuse F501 is mounted internally and is to protect the regulator circuits in case of device failure. After the power switch, this raw supply is fed to the main regulator circuit.

The B+ regulator consists of Q504 and Q505 and associated circuitry. It is configured as a low drop-out, 15V regulator with a forward voltage drop as low as 0.3 volts. Specifically the output voltage closely follows the input voltage below the regulation threshold. The regulated voltage can be reduced to 12V by grounding pin 13 on the control connector, which shunts zener diode D511 with a lower voltage combination of D509 and D510. Pass transistor Q504 is bolted to the rear panel of the receiver to dissipate the heat generated when regulating down from high voltage supplies.

2) PLL section.

2.0 Frequency configuration.

The PLL system and two other signal sources grouped in this section produce the local oscillator (LO), heterodyne (HET) and carrier (CAR) signals that are fed to the IF mixers. There is no signal interconnection between these sources, but their frequencies are controlled together in order to tune the receiver.

The following frequency relationships apply:-

Received frequency = <LO> - <HET> - 455 kHz in AM and FM modes.

Received frequency = <LO> - <HET> - <CAR> in SSB, FAX and CW modes.

2.1 Carrier generator.

The carrier generator circuit is split into two sections - a programmable digital divider which is situated on the control unit PCB, and a filter and amplifier which is on the main unit PCB. The programmable divider takes its input from the 10.080 MHz reference oscillator in the microcontroller, Q205. When a carrier signal is needed (in CW, LSB, USB and FAX modes) Q208 divides the reference frequency by four to give 2.52 MHz which is fed to programmable counter Q209. The counter division ratio is controlled by the mode setting:-

Selected Mode	Division ratio	Counter o/p frequency	Selected harmonic	CAR frequency
CW	210	12.000 kHz	38 th	456.000 kHz
LSB	250	10.080 kHz	45 th	453.600 kHz
USB	254	9.9213 kHz	46 th	456.378 kHz
FAX	204	12.353 kHz	37 th	457.059 kHz

The output from the programmable divider is a stream of short pulses, containing many harmonics of the fundamental frequency. This pulse stream is fed through a 4 kHz bandwidth ceramic filter which selects one harmonic near to 455 kHz. This is then amplified and fed to the product detector.

2.2 Heterodyne oscillator.

The heterodyne oscillator, Q19 / X7, is a fundamental mode crystal oscillator running at about 14.848 MHz. The diode D36 in the drain of FET Q19 is operated in its non-linear region and produces strong harmonics of the fundamental frequency. The third harmonic at 44.545 MHz is selected by tank circuit TC4 and L42, amplified by Q4, and fed to the second mixer.

The oscillator frequency is adjusted by TC3 and also by the bias voltage on varicap diode D30. A change of about 0.6V in bias will move the oscillator frequency by 330 Hz, resulting in a 1 kHz change of HET frequency. The bias voltage is derived from a section of the Q24 op-amp which acts as a current-to-voltage converter driven through an R - 2R - 4R ... resistor chain (R85 to R91) from a 7-bit control register. The HET frequency can be controlled in 128 steps across its 1 kHz range, each step being nominally 7.8 Hz.

Variable resistor VR2 adjusts the span of the HET oscillator tuning. Component values in the current-to-voltage converter are chosen so that the setting of VR2 has little effect at the highest bias voltage (corresponding to maximum HET frequency and minimum tuned frequency), allowing VR2 and TC3 to be adjusted independently.

2.3 Local oscillator.

The local oscillator, Q18, is a wide range VCO tuning from 45 MHz to 75 MHz. A JFET is used as the gain element to provide a low-noise signal which is buffered by Q16 / Q17 then fed to the first mixer and the PLL system divider. The oscillator is tuned by varicap diode D29 controlled from the PLL system. Four frequency ranges are available depending on the control voltages on LO1, LO2 and LO3. PIN diodes D31, D32 and D33 select the required inductance value of oscillator coil T4.

Coils and frequency ranges are selected as follows:-

Tuning range (MHz)	LO frequency (MHz)	Select lines LO1	LO2	LO3
0.030 to 4.999	45 to 50	Low	Low	High
5.000 to 10.999	50 to 56	High	Low	High
11.000 to 18.999	56 to 64	Low	High	High
19.000 to 29.999	64 to 75	Low	Low	Low

2.4 PLL system.

The PLL system controls the frequency of the local oscillator using a crystal-derived reference of 672 kHz from the control system. All of the functional blocks of the PLL system are contained in Q29 but a prescaler, Q28, is also required to reduce the local oscillator frequency so that Q29 can operate correctly. Q28 is a dual-modulus prescaler, and can divide by 16 or 17 under the control of Q29 in a pulse-swallowing counter. This counter is arranged as a programmable divider, where the division ratio can be controlled by the receiver's microcontroller.

Both the LO signal and the reference are divided down to 1 kHz and applied to phase detector circuits in Q29. When the phase error is large, a linear digital phase detector can correct the loop error quickly. As the phase error becomes small, the digital detector becomes inactive and an analogue sample-and-hold detector is used instead. This can only correct small phase errors, but offers much better residual noise performance than the digital detector. When the digital detector operates, the out-of-lock output from Q29 goes high, muting the receiver audio.

Both phase detector outputs go to an active integrating loop filter formed by op-amp Q25. The output from this is further filtered by R81 / C115 and then controls varicap diode D29 in the oscillator circuit. To increase the available voltage swing on the tuning diode, its cathode is held at 2 volts below ground. The negative potential is derived from a charge pump C129 / D37 / D38 / C130, driven by an output at 14 kHz from the PLL IC, Q29.

2.5 High stability option.

The high stability option uses a temperature compensated crystal oscillator as a frequency standard reference for the local oscillator, heterodyne and carrier signals. The TCXO, X601, operates at 10.080 MHz and its signal is fed via Q604 to the microcontroller Q205 replacing the normal crystal oscillator, X201. This locks the local oscillator and carrier signal frequencies to the main reference.

The heterodyne signal is normally derived from a free-running, voltage controlled crystal oscillator, X7 and Q19. To lock the frequency of this oscillator to the main reference, a closed frequency monitoring and correction loop is formed through a microcontroller Q605. The HET signal is buffered by Q34 and mixed with the 66th harmonic of a 672 kHz signal from the microcontroller Q605. The resulting signal is between 192 and 193 kHz. Filtered and amplified by L601 / C607 / Q602 / Q604 it is then counted by the timer inside Q605.

The HET tuning data fed to the D to A converter is duplicated at the output of Q603 and fed into Q605 where it indexes a table of required frequencies. Any discrepancy between the counted and required frequencies generates a 'pump-up' or 'pump-down' pulse of appropriate width into integrator Q606 / C615. The output of the integrator in turn controls the frequency of the HET osc via a current feed into the D to A converter through R618. Removing link JP2 allows the control loop to be broken so that the HET oscillator can be aligned.

3) Control section.

3.0 Microcontroller and control program.

At the centre of the control system is the microcontroller Q205. This integrated circuit contains all of the elements of a microprocessor system - program memory (ROM), data memory (RAM), a central processing unit and input and output ports. With the exception of the clock oscillator and the REF output at 672 kHz, all lines into and out of the microcontroller are in a static condition unless the receiver's controls are operated, so the signals radiated by the control system are kept at a very low level.

The microcontroller chip contains a control program specific to the HF-235 receiver. This program provides an interface between the operator and the receiver's tuning and filter selection systems, and also provides additional features such as frequency memories. The program accepts commands from the tuning encoder, the function buttons, the mode switch and the numeric keypad, and in turn controls the display, the input filters, the RF attenuator, the IF and audio filters, the PLL system and the heterodyne oscillator.

When the control system is in an idle condition, with no controls being operated, the control program remains in a monitoring loop looking for any changes in the controls. If any control is moved, the program detects this and modifies its internal status to suit. This may involve just changing internal memory values, or it may require data to be sent to the display or the receiver control registers. There are four subprograms in the monitoring loop, dealing with the tuning knob, the mode switch, the function buttons and the numeric keypad.

As an example of the operations performed by the control program, consider the action of the program in response to rotation of the tuning knob.

Tuning encoder rotation is detected:-

Establish direction of rotation (up/down).

Establish speed of rotation (fast/slow).

Check mode selected and look-up tuning rate from internal table.

Increase or decrease stored frequency value by tuning rate value.

Check the new tuning value against the operating frequency limits and inhibit tuning if these are exceeded.

If the kHz digits have changed, convert the frequency value into 7-segment digits and send this data to the display.

Select the appropriate input filters and local oscillator frequency range.

Convert the frequency value into binary form suitable for programming the PLL synthesizer and add an offset value depending on the mode selected.

Send the new frequency information to the heterodyne oscillator and, if they require reprogramming, to the PLL and the receiver control registers.

Store the new frequency value in external non-volatile memory.

Check the tuning encoder for further rotation, and either repeat this sequence or return to the monitoring loop.

All tuning of the receiver is done in terms of fine-tune steps. Each 1 kHz of tuning range is divided into 128 steps, so each step is approximately 8 Hz. One complete rotation of the tuning encoder generates 200 pulses, and each of these pulses will change the frequency by a preset number of steps. The number depends on the tuning rate and the mode selected according to the following table:-

Receiver Mode	Tuning increments (steps of 7.8 Hz) Slow tuning rate	Fast tuning rate
CW, LSB, USB, FAX	1	12
AM	6	64
AMS	1	1
FM	16	64

The fast or slow tuning rates are selected according to the rate at which pulses come from the tuning encoder. Note that in practice the fast tuning rate will not be as fast as indicated in the table because some pulses from the encoder will be missed by the control program (when it is involved in other tuning operations), therefore rapid rotation of the tuning knob usually results in a mixture of fast and slow tuning rates.

As each new kHz frequency is tuned the control program establishes which input filter to select and which local oscillator frequency range to select. The same part of the program also checks the frequency range limits, which are 30 kHz minimum and 29999 kHz maximum. Frequencies outside the limits, whether derived from the memories or entered from the numeric keypad, are converted to the nearest limit frequency.

Filter and oscillator ranges are summarised below:-

Receiver frequency		Input filter	Oscillator range
(Low limit)	30 kHz	1	0
	499 kHz	1	0
	500 kHz	2	0
	1699 kHz	2	0
	1700 kHz	3	0
	4199 kHz	3	0
	4200 kHz	4	0
	4999 kHz	4	0
	5000 kHz	4	1
	10999 kHz	4	1
	11000 kHz	5	2
	18999 kHz	5	2
	19000 kHz	6	3
(High limit)	29999 kHz	6	3

3.1 Controls.

The front panel controls connect to the microcontroller through an 8-bit input port, P1. The five function buttons each pull an input line down to ground when pressed; there is a pull-up resistor to 5V inside the microcontroller chip. Tuning knob rotation is detected by a mechanical shaft encoder, which generates two streams of pulses which differ in phase. The controller is able to establish the speed and direction of tuning from these two signals after pulse shaping and glitch removal by Q207.

The rotary mode switch controls the receiver state by switching several supply lines (all at 5V) feeding the carrier generator, the AGC system and the detector audio switching. Three of these lines are sampled by the microcontroller through its flag inputs T0, T1 and INT so that tuning rates and frequency offsets can be established. The link JP1 provides additional mode information - when it is in place LSB mode is replaced by FAX mode, which has a different frequency offset. Mode supplies are switched as follows:-

Mode	Supply line state						Flag state		
Selected	SSB	USB	FM	AMS	AM	CW	T0	T1	INT
CW	5V	0V	0V	0V	0V	5V	1	0	1
LSB/FAX	5V	5V	0V	0V	0V	0V	1	1	0
USB	5V	0V	0V	0V	0V	0V	1	0	0
AM	0V	0V	0V	0V	5V	5V	0	0	1
AMS	0V	5V	0V	5V	0V	0V	0	1	0
FM	0V	0V	5V	0V	0V	0V	0	0	0

3.2 Frequency memory.

Frequencies stored in the receiver's memories are not held within the microcontroller, but are stored in RAM chip Q204, a CMOS device with its supply maintained by a lithium battery when the receiver is switched off. The tuned VFO frequency is also stored in this RAM so that the receiver can resume operation on its previous frequency at switch-on.

Inside the receiver, frequencies are stored in the form of separate decimal digits for the kHz part (5 digits) and as a 7-bit binary value for the fine tune part (fractions of kHz). The external frequency memory chip is 4-bits wide by 256 locations; each frequency uses eight locations - five for the kHz digits, two for the fine tune value and one unused location. There is room in the memory for 32 frequency entries, but only 31 are used for the 30 memories and the VFO frequency.

Q204 is not attached to the microprocessor bus, but is controlled via an 8-bit output port (for the address information) and a 4-bit wide bidirectional port (for data). The data port is shared with the numeric keypad and the remote control interface. The RAM is controlled by three other lines - read and write strobes from the microcontroller which pulse momentarily low to transfer data to or from the RAM, and a power-down line from voltage detector Q201 which disables the RAM when power is turned off and prevents data corruption.

3.3 Display.

The liquid crystal frequency and function display is driven from a dedicated controller Q206. The LCD segments turn on when a voltage exists between the segment line and the backplane or common. It is important that there is no residual current flow through an LCD, so the segments are driven with a low frequency AC supply produced inside Q206 by oscillator R224 / C212. The backplane connection is fed with a square wave at about 60 Hz, and blank segments are fed with an identical signal. Lit segments are fed with a signal in antiphase to the backplane. The display used is a negative image one, so it is normally all black, and segments become clear when energised.

Segment data is transferred from the microcontroller to the display driver by a two line serial bus; DATA and CLOCK. Data transfer commences when the data line goes high and the clock line pulses low, then the state value of each segment is placed on the data line and the clock line pulsed low again for each segment. Transfer is complete when 35 bits of data have been sent, and then the display will be changed to the new configuration. Further clock pulses will be ignored until the data line goes high again.

Display driver serial data format:-

Bit 0 (start)	always high (1)		Bit 18	digit 5	seg g
Bit 1	memory flag		Bit 19	digit 4	seg b
Bit 2	decimal point		Bit 20		seg a
Bit 3	digit 2	seg e	Bit 21		seg f
Bit 4		seg d	Bit 22		seg g
Bit 5		seg c	Bit 23	digit 3	seg b
Bit 6	digit 3	seg e	Bit 24		seg a
Bit 7		seg d	Bit 25		seg f
Bit 8		seg c	Bit 26		seg g
Bit 9	digit 4	seg e	Bit 27	digit 2	seg b
Bit 10		seg d	Bit 28		seg a
Bit 11		seg c	Bit 29		seg f
Bit 12	digit 5	seg e	Bit 30		seg g
Bit 13		seg d	Bit 31	digit 1	seg b
Bit 14		seg c	Bit 32		seg c
Bit 15		seg b	Bit 33		seg a,d,e,g
Bit 16		seg a	Bit 34	always low (0)	
Bit 17		seg f	Bit 35	always low (0)	

Digit 1 = 10's MHz (Only blank, 1 or 2)
Digit 2 = units MHz
Digit 3 = 100's kHz
Digit 4 = 10's kHz
Digit 5 = units kHz

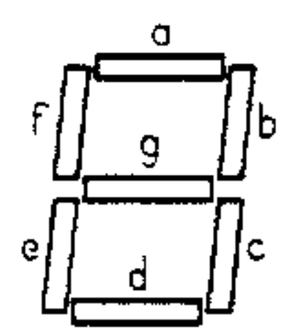

The AMS LOCK indicator segments of the display are not controlled from the display driver chip, but are driven from the exclusive-or gate Q207. This is driven from the LCD backplane signal and provides a true or inverted feed to the two L segments depending on the logic state of the LCK signal from the detector board.

3.4 Receiver interface.

The switching functions within the receiver are controlled via a three line serial bus from the microcontroller, which sends data to registers located on the main receiver circuit board. The three lines (CLK, DATA and STRB) are filtered near to the point of entry to the main unit by L/C networks to prevent low-level spurious signals from entering the receiver control lines.

The serial data is converted into steady-state signals for receiver control by a series of cascaded shift registers - Q13, Q14, Q30 and Q31 are each 8-bit registers. Because not all of the control lines need to change when the receiver is tuned, the shift register can be split into three sections, effectively limiting its length to 8, 16 or 32 bits. To set the control registers, a data stream of the appropriate length is sent from the microcontroller, each data bit separated by a clock pulse (the CLK line goes momentarily low). The end of the data stream is marked by the STRB line pulsing high. Note that the CLK signal is shared between the display driver and the receiver control, so there will be spurious data and clock signals fed into the registers; only the data stream before a STRB pulse has any effect on the receiver.

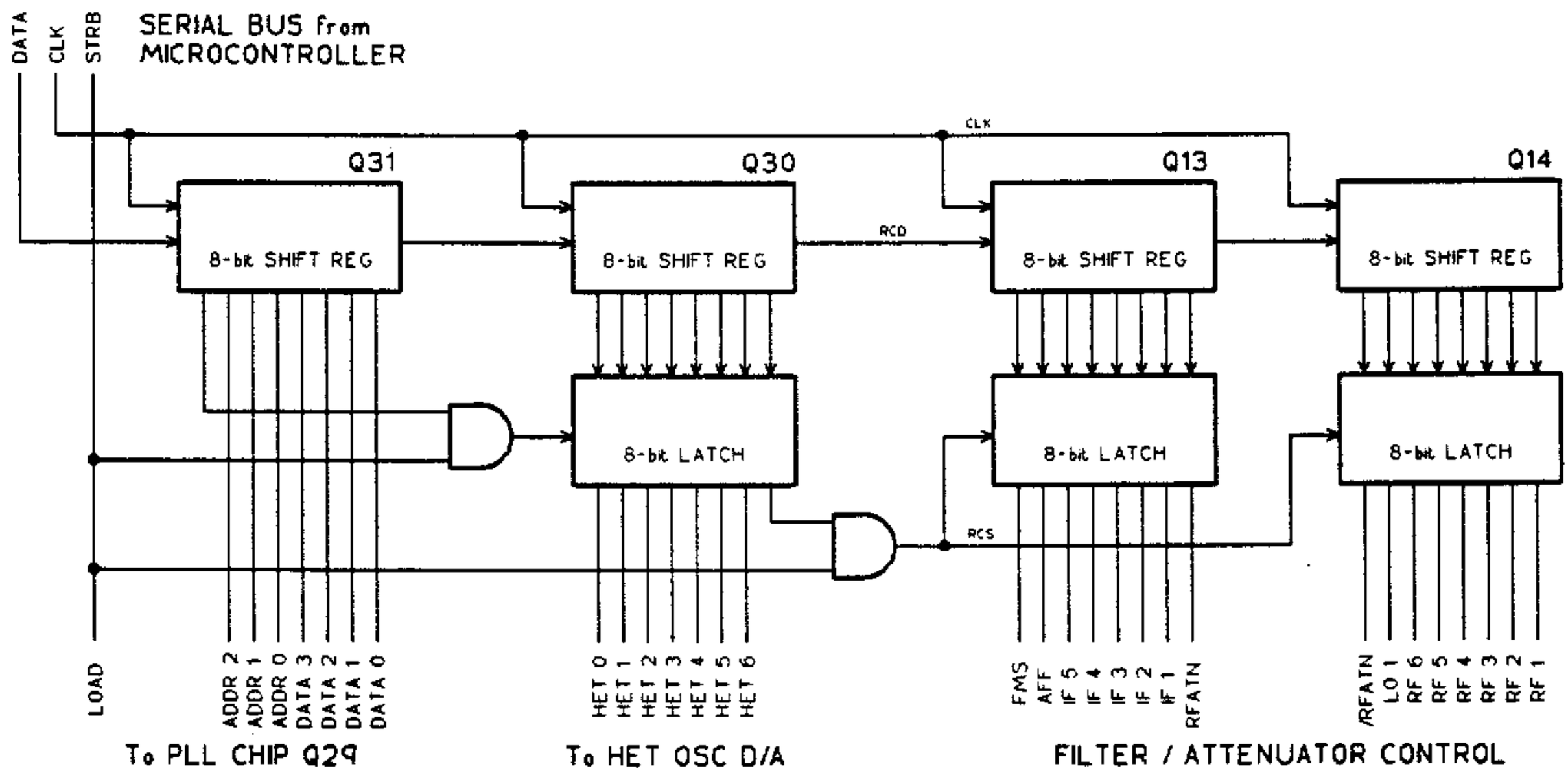

Receiver control shift-register arrangement.

The format of receiver control data is shown below:-

Format 1: 8-bit data, PLL register load.

Bit 0 (start)	PLL register data bit 0 (lsb)
bit 1	PLL register data bit 1
bit 2	PLL register data bit 2
bit 3	PLL register data bit 3 (msb)
bit 4	PLL register address bit 0
bit 5	PLL register address bit 1
bit 6	PLL register address bit 2
bit 7	ZERO to select 8-bit shift register length

Format 2: 16-bit data, HET oscillator tune.

Bit 0 (start)	ZERO to select 16-bit shift register length
bit 1	HET tune data bit 6 (msb)
bit 2	HET tune data bit 5
bit 3	HET tune data bit 4
bit 4	HET tune data bit 3
bit 5	HET tune data bit 2
bit 6	HET tune data bit 1
bit 7	HET tune data bit 0 (lsb)
bit 8	ZERO
bit 9	ZERO Null command to PLL chip
bit 10	ZERO (register = 0)
bit 11	ZERO (data = 0)
bit 12	ZERO
bit 13	ZERO
bit 14	ZERO
bit 15	ONE to select 16-bit shift register length

Format 3: 32-bit data, Filter selection.

Bit 0 (start)	Input filter 1 select	ONE for Fr < 500 kHz
bit 1	Input filter 2 select	ONE for 500 kHz to 1.7 MHz
bit 2	Input filter 3 select	ONE for 1.7 to 4.2 MHz
bit 3	Input filter 4 select	ONE for 4.2 to 11 MHz
bit 4	Input filter 5 select	ONE for 11 to 19 MHz
bit 5	Input filter 6 select	ONE for Fr > 19 MHz
bit 6	Local Osc range 1 select	ONE for 5 to 11 MHz
bit 7	RF attenuator control	ZERO to attenuate
bit 8	RF attenuator control	ONE to attenuate
bit 9	IF filter 1 select	ONE for 10 kHz
bit 10	IF filter 2 select	ONE for 4 kHz and 7 kHz
bit 11	IF filter 3 select	ONE for 2.2 kHz
bit 12	IF filter 4 select	ONE for 2.2 kHz and 4 kHz
bit 13	IF filter 5 select	ONE for 7 kHz and 10 kHz
bit 14	Audio filter select	ONE for 200 Hz audio filter
bit 15	FM squelch control	ONE for squelch bypass
Bit 16	ONE to select 32-bit shift register length	
Bits 17 to 31	As format 2, bits 1 to 15	

The PLL synthesizer chip Q29 is programmed on a register by register basis, each one of eight registers selected by the three address lines. To change the PLL frequency, seven of the registers need reprogramming, the remaining register is programmed only when the receiver is first switched on. The programmable divider in Q29 is set with a 17-bit binary number, which is the PLL frequency in kHz.

PLL chip register contents are as follows:-

Register	Address bits			Data bits				
	A2	A1	A0	D3	D2	D1	D0	
0	0	0	0	0	0	0	0	Used as Null command
1	0	0	1	N3	N2	N1	N0	
2	0	1	0	0	0	0	0	Loaded at switch-on
3	0	1	1	N7	N6	N5	N4	
4	1	0	0	0	N10	N9	N8	
5	1	0	1	N14	N13	N12	N11	
6	1	1	0	0	0	N16	N15	
7	1	1	1	0	1	1	1	End programming sequence

3.5 Numeric keypad.

The keypad uses a single line serial link to send data to the microcontroller. Key depressions are converted into an asynchronous PPM (pulse position modulation) data stream by integrated circuit Q401 - each key is uniquely represented by a 5-bit word which is sent repetitively whilst the key is held down. Power for the keypad unit is sent down the data connection, and data is transmitted by current modulation of this supply. Transistor Q404 is switched by the data output of Q401 to achieve this. This strange data transfer system allows a remote keypad unit to be simply connected with a single screened lead.

The keypad current passes through R204 on the control unit board, and with Q203 this serves to recover the PPM data. Q203 is normally turned off, but when the keypad is operated, charge pump C202 / D203 provides bias to switch the transistor on except for a short period during each data pulse. The PPM data is presented to the microcontroller on P20, one of the RAM data lines. Data stream decoding is done by software within the microcontroller. When a key on the keypad is released, Q203 turns off after a short delay allowing normal RAM data bus operation.

Each key code is transmitted as a series of six current pulses, with the five time intervals between the pulses changed according to the data. The time between pulses may be either 3.15ms, representing a ONE, or 2.1ms, representing a ZERO. These times are in the ratio 3:2, with the pulse width being about one sixth of the ZERO time, ie 350us. The 5-bit key code consists of a ONE followed by the 4-bit key code shown in the table below. Key codes are transmitted continuously, with a gap of about twice the ONE time between each code word.

An example is given for the key **6** (code = 0 0 1 0):-

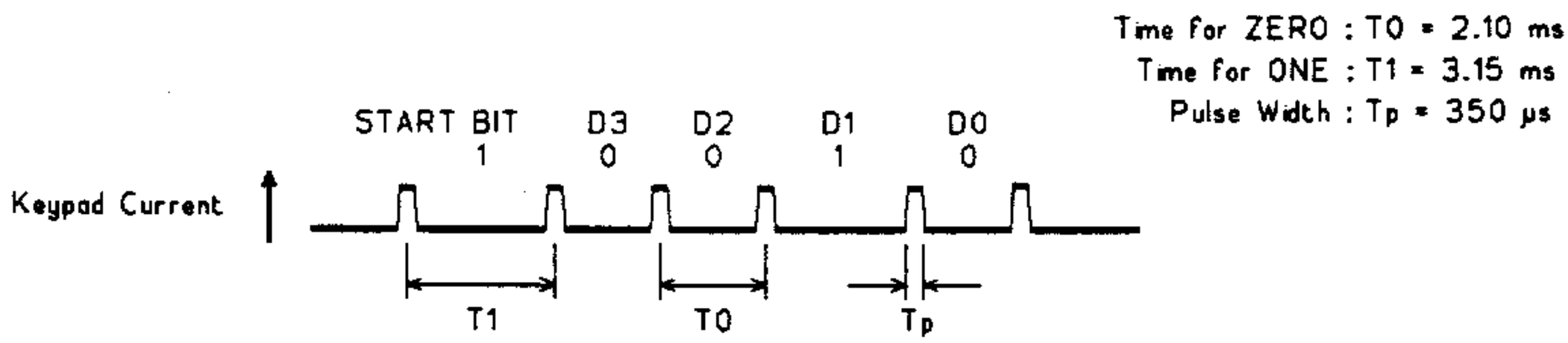

Key	Data code D3	D2	D1	D0
No key pressed	No data pulses			
0	0	1	0	0
1	1	0	1	1
2	0	1	1	1
3	0	0	1	1
4	1	0	1	0
5	0	1	1	0
6	0	0	1	0
7	1	0	0	1
8	0	1	0	1
9	0	0	0	1
Cancel	1	0	0	0
Enter	0	0	0	0

3.6 Remote control option.

The remote control option adds another microcontroller to the receiver which works in conjunction with the main controller, providing operation from both the front panel and the remote device via an RS232 serial link. The processor Q705 handles all command decoding, parallel to serial and serial to parallel conversion and interfacing to the main processor and receiver mode control.

The RS232 interface is electrically isolated from the receiver by opto-isolators Q706 and Q707, and by power supply invertor Q710. Two sections of operational amplifier Q708 provide the data and enable signal input interface from V24 levels to drive the input opto-isolator. Clamp diodes D706, D707, D714 and D715 prevent excessive input voltages damaging Q708 and diodes D708 and D709 provide the input switching threshold at 1.5 volts. The + / - 10 volt output is produced from a third section of Q708 via current limiting resistor R711. Relay RL701 is closed only when the receiver is selected to communicate with the controller, presenting an otherwise high impedance on the RXD data line and allowing parallel bus connection of several receivers.

The timing reference for the serial interface baud rate is derived from the 10.368 MHz clock crystal for the interface processor.

Because the receiver mode can be set by remote command, overriding the mode switch, the remote control option intercepts the mode control lines by replacing the switch unit circuit board. The mode switch sends a three-bit binary mode indication to the processor, and when a change is detected, or when a mode change command is received the processor reloads shift register Q710 with a new mode control bit pattern. The outputs from Q701 replace the previous direct connections from the mode switch to control the receiver.

Frequency information is passed between the two processors by a single serial data line and a control line (RC0 and RC1). The data format resembles that of the keypad, with extensions to allow frequencies to be set to 8Hz resolution, and read back to the interface processor. Not all facilities within the receiver can be controlled remotely, but for special applications the four unassigned control port lines can be utilised for additional control.

Signal strength measurement is achieved by an A to D converter which samples the receiver's AGC line. The converter is a single slope, integrating type comprised of Q703, Q704, timing capacitor C704 and timing software within the interface processor. Normally Q704 is switched on, clamping the voltage on C704 to a pedestal set by VR701. When a signal strength request is decoded, a timer is started, Q704 is switched off and C704 charges through R702 and VR702 from the AGC voltage, buffered by a section of Q703. The end of the integration cycle is detected by the second section of Q703 when a threshold voltage is reached on C704. The timer is stopped, and its value reflects the AGC voltage and hence the received signal strength.

3.7 Test routines.

A small part of the control program is devoted to test and alignment routines. These check for the correct operation of parts of the control system and provide signals and receiver states convenient for testing and aligning the receiver. The control system tests are not exhaustive, and the fact that the test routines do not report an error should not be used as verification of a faultless unit, but many errors can be detected, and often the type of fault reported is a useful guide to repair.

In test mode the five buttons on the front panel serve to control the program. For convenience these are designated **TEST1** through to **TEST5** (ie **MEMORY** is **TEST1** and **MHz UP** is **TEST5**). The receiver is set into test mode by depressing the **TEST1** button as it is switched on, and the message **TEST** should appear on the display. This message will remain on the display provided that no faults are found, if a fault condition is detected the display changes to show the **FLT** message. To clear a fault indication the receiver must be switched off.

For instructions on how to use the test routines for checking and alignment, please refer to the **Test and alignment** section of this manual. Here, the testing procedures used by the program are outlined.

When the receiver is switched on, in normal mode or test mode, a brief check is performed on the program memory and microprocessor registers. A failure in this test will result in a fault indication immediately and the receiver will not operate. The remaining tests are initiated by pressing one of the **TEST** buttons. Most tests will operate continuously whilst a **TEST** button is held, allowing serial data lines to be monitored with test equipment.

TEST1 Enters TEST mode from switch-on, and sends test message to display.

TEST2 Programmes and tests the frequency memory RAM chip. Note that any frequencies saved will be lost when this test is executed. A fault indication will result if data corruption is detected. The frequencies stored in the memory can be later used to test filter and oscillator switching (see below).

TEST3 Programmes the receiver control registers for alignment phase 1 (see below).

TEST4 Programmes the receiver control registers for alignment phase 2 (see below).

TEST5 Returns to normal receiver operating mode (end of test sequences).

Alignment frequencies entered in RAM by **TEST2** :-

Memory number	Frequency	Purpose
1	29.900 MHz	HF LO adjust, Input filter 6 check
2	19.000 MHz	Local osc range 2 to 3 switching
3	11.000 MHz	Local osc range 1 to 2 switching
4	5.000 MHz	Local osc range 0 to 1 switching
5	100 kHz	Low frequency LO check
6	500 kHz	Input filter 1 and 2 check
7	1.700 MHz	Input filter 2 and 3 check
8	4.200 MHz	Input filter 3 and 4 check
9	11.000 MHz	Input filter 4 and 5 check
10	19.000 MHz	Input filter 5 and 6 check
VFO and all other memories	14.000 MHz	

Receiver state set by **TEST3** and **TEST4** :-

Control function	TEST3 state	TEST4 state
LO range select	Range 0	Range 0
PLL system	LO frequ = 45.000 MHz	LO frequ = 44.999 MHz
HET oscillator	Data = 0 0 0 0 0 0 0	Data = 1 1 1 1 1 1 1
	HET frequ = 44.545 MHz	HET frequ = 44.544008 MHz
Input filter select	No filters selected	No filters selected
IF bandwidth select	7 kHz	7 kHz
AF filter select	Normal (wide)	Normal (wide)
FM squelch control	Squelch bypassed	Squelch bypassed
RF attenuator	Out (but both relays off)	Out (but both relays off)

Semiconductor data.

74HC4094 Shift and store bus register, Q13, Q14, Q30, Q31 and Q701.

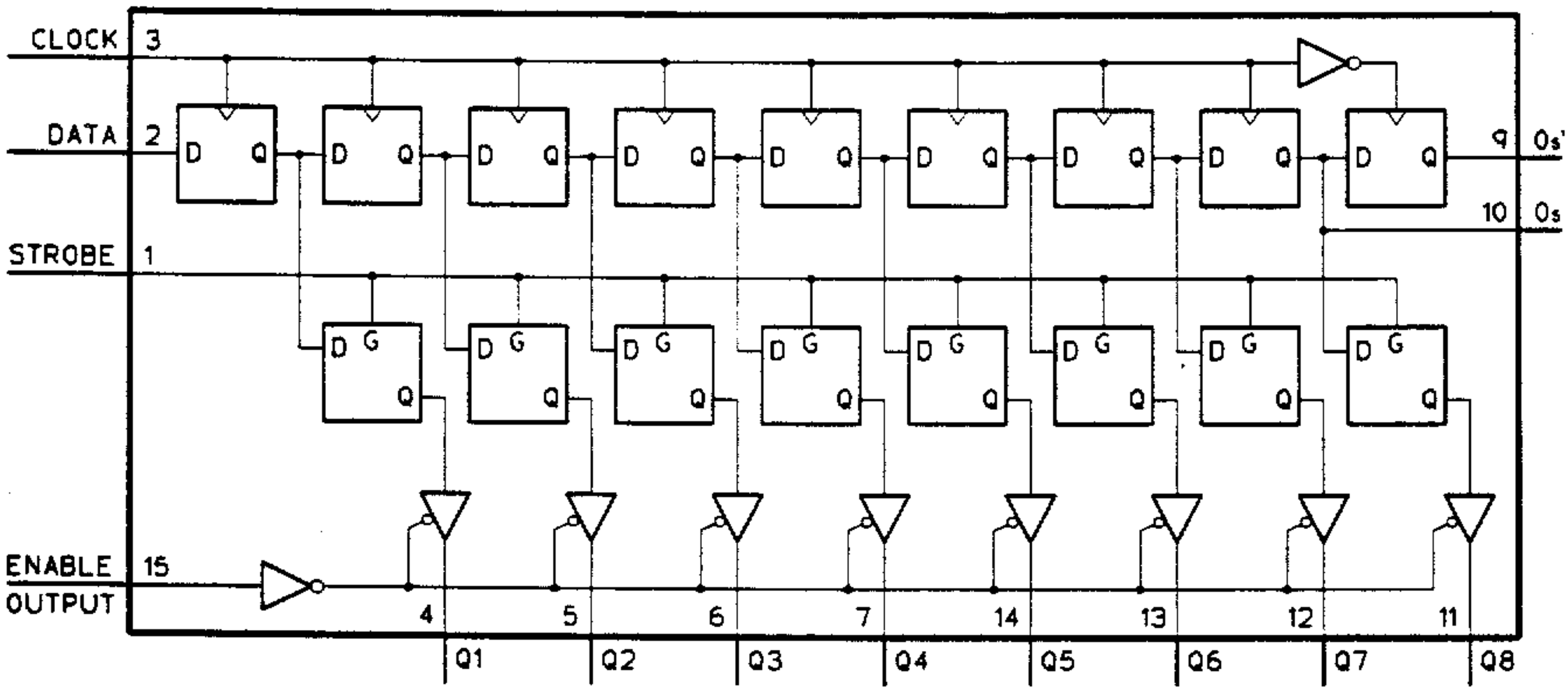

The 4094 consists of an 8-bit shift register, transparent latch and tri-state output buffer. The shift register is loaded serially on the positive edge of each CLOCK pulse. Serial data from the last stage of the register is presented at the Os output, and, delayed until the negative edge of the CLOCK, on the Os' output. (Os' is used for cascading several registers).

Parallel data from the shift register is transferred to the latch when the STROBE line is high, and retained while STROBE is low, so the outputs are unaffected by shift register activity. The outputs are buffered with tri-state devices, but in the HF-235 these are permanently enabled.

Q13 pin functions.

Pin	Name	I/O	State	Function	Pin	Name	I/O	State	Function
1	Strobe	In	L [H]	RCS, pulses high at end of tune	9	Os	Out	L / H	No connection
2	Data	In	L / H	Serial data, changes during tune	10	Os'	Out	L / H	Serial data, changes during tune
3	Clock	In	H [L]	CLK, pulses low during tuning	11	O7	Out	L / H	RFATN, high for attenuator
4	O0	Out	L / H	FMS, high to bypass FM squelch	12	O6	Out	L / H	IF1, high to select 500 kHz LPF
5	O1	Out	L / H	AFF, high for narrow CW filter	13	O5	Out	L / H	IF2, high to select 7 kHz filter
6	O2	Out	L / H	IF5, complement of IF4	14	O4	Out	L / H	IF3, high to select 2.2 kHz filter
7	O3	Out	L / H	IF4, high to select 4 kHz filter	15	EO	In	H	Always high
8	Vss		L	Ground	16	Vdd		H	5V supply

Q14 pin functions.

Pin	Name	I/O	State	Function	Pin	Name	I/O	State	Function
1	Strobe	In	L [H]	RCS, pulses high at end of tune	9	Os	Out	L / H	No connection
2	Data	In	L / H	Serial data, changes during tune	10	Os'	Out	L / H	No connection
3	Clock	In	H [L]	CLK, pulses low during tuning	11	O7	Out	L / H	FLT1, high for input filter 1
4	O0	Out	L / H	/RFATN, low for attenuator	12	O6	Out	L / H	FLT2, high for input filter 2
5	O1	Out	L / H	LO1, high for LO range 1	13	O5	Out	L / H	FLT3, high for input filter 3
6	O2	Out	L / H	FLT6 / LO3, high for filter 6	14	O4	Out	L / H	FLT4, high for input filter 4
7	O3	Out	L / H	FLT5 / LO2, high for filter 5	15	EO	In	H	Always high
8	Vss		L	Ground	16	Vdd		H	5V supply

Q30 pin functions.

Pin	Name	I/O	State	Function	Pin	Name	I/O	State	Function
1	Strobe	In	L [H]	Pulses high at end of tune	9	Os	Out	L / H	No connection
2	Data	In	L / H	Serial data, changes during tune	10	Os'	Out	L / H	Serial data, changes during tune
3	Clock	In	H [L]	CLK, pulses low during tuning	11	O7	Out	L [H]	Reg load, pulses when filters change
4	O0	Out	L / H	HET0, Het osc tune bit 0	12	O6	Out	L / H	HET6, Het osc tune bit 6
5	O1	Out	L / H	HET1, Het osc tune bit 1	13	O5	Out	L / H	HET5, Het osc tune bit 5
6	O2	Out	L / H	HET2, Het osc tune bit 2	14	O4	Out	L / H	HET4, Het osc tune bit 4
7	O3	Out	L / H	HET3, Het osc tune bit 3	15	EO	In	H	Always high
8	Vss		L	Ground	16	Vdd		H	5V supply

Q31 pin functions.

Pin	Name	I/O	State	Function	Pin	Name	I/O	State	Function
1	Strobe	In	H	Always high	9	Os	Out	L / H	No connection
2	Data	In	L [H]	DATA, pulses high during tune	10	Os'	Out	L / H	Serial data, changes during tuning
3	Clock	In	H [L]	CLK, pulses low during tuning	11	O7	Out	H [L]	PLL D0, pulses low during tuning
4	O0	Out	L [H]	Reg load, pulses high during tune	12	O6	Out	L [H]	PLL D1, pulses high during tuning
5	O1	Out	L [H]	PLL A2, pulses high during tuning	13	O5	Out	L [H]	PLL D2, pulses high during tuning
6	O2	Out	L [H]	PLL A1, pulses high during tuning	14	O4	Out	L [H]	PLL D3, pulses high during tuning
7	O3	Out	L [H]	PLL A0, pulses high during tuning	15	EO	In	H	Always high
8	Vss		L	Ground	16	Vdd		H	5V supply

Q701 (Remote control option) pin functions. USB mode shown.

Pin	Name	I/O	State	Function	Pin	Name	I/O	State	Function
1	Strobe	In	L [H]	MS, pulses high at mode change	9	Os	Out	L / H	No connection
2	Data	In	L / H	MD, serial data	10	Os'	Out	L / H	No connection
3	Clock	In	H [L]	MC, pulses low at mode change	11	O7	Out	L / H	No connection
4	O0	Out	L	AM, high for AM mode	12	O6	Out	L	FAX, high for LSB and FAX modes
5	O1	Out	L	FM, high for FM mode	13	O5	Out	L	AMS, high for AMS mode
6	O2	Out	H	USB, high for USB mode	14	O4	Out	L	CW, high for CW mode
7	O3	Out	H	SSB, high for CW, LSB, USB	15	EO	In	H	Always high
8	Vss		L	Ground	16	Vdd		H	5V supply

MM5453N Liquid crystal display driver, Q206.

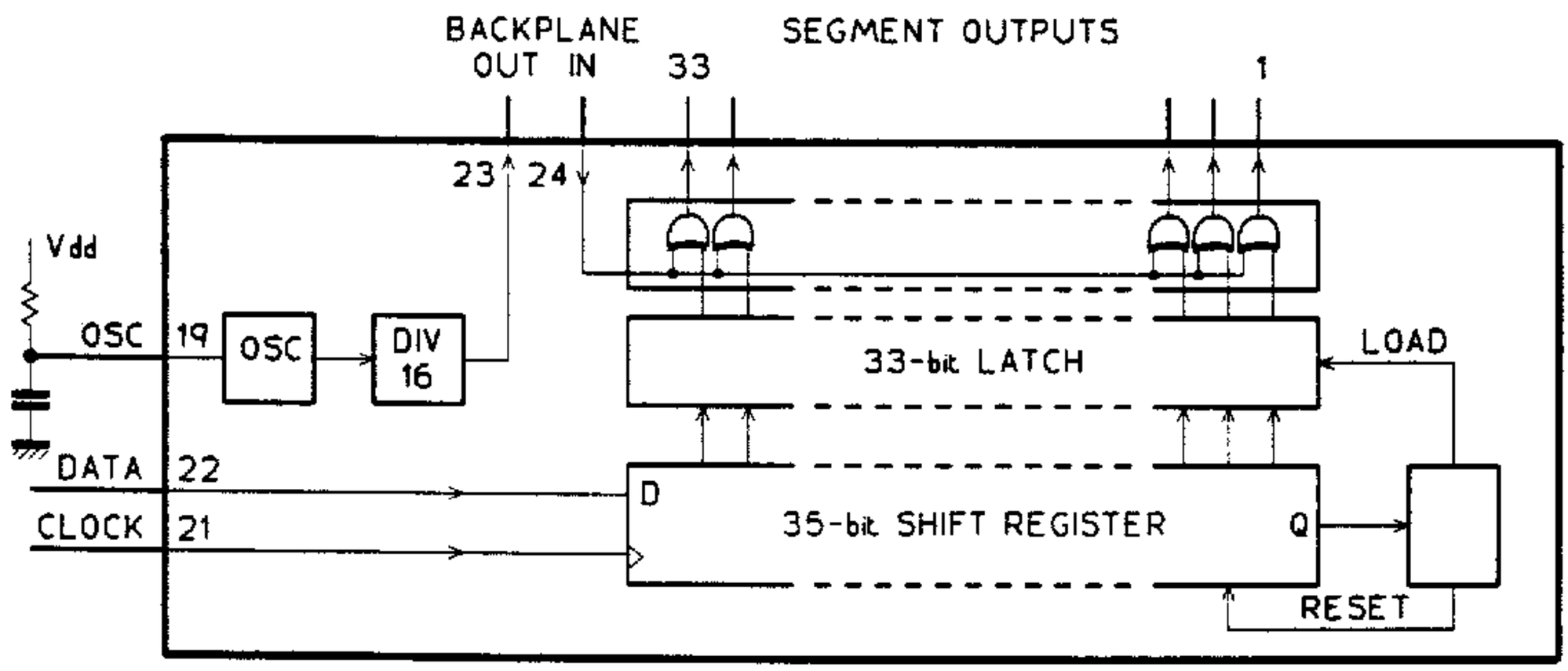

LCD driver MM5453N contains a 35-bit shift register, 33-bit data latch, LCD driver buffers and a backplane signal oscillator. The data latches are loaded when a ONE bit is sent through the shift register. After the latches are loaded the shift register is also cleared, so new data has to pass through the entire length of the register before the latches are reloaded.

The on-chip oscillator feeds a divide by 16 counter which produces the LCD backplane signal with a 50 : 50 mark space ratio at about 60 Hz. The output drivers for each segment produce the same signal in either true or inverted form. All LCD signals swing between Ground and Vdd at 5V.

TDD1742T PLL frequency synthesizer, Q29.

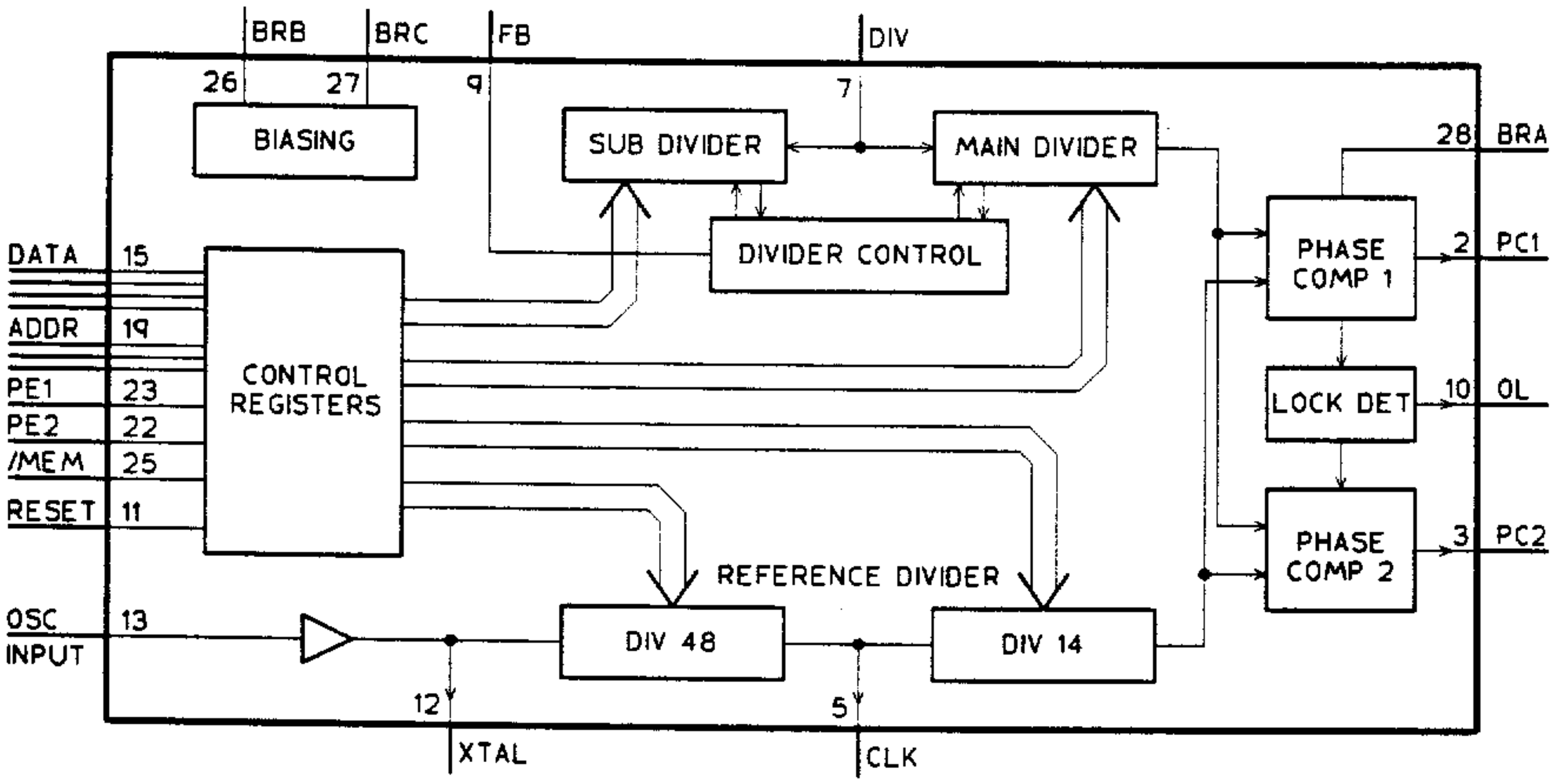

The TDD1742T contains two programmable dividers, two phase comparators and associated logic and control circuits. The reference divider is permanently programmed to divide by 672 in the HF-235, with an intermediate tap after division by 48 giving a 14 kHz CLK signal. The main local osc divider is configured as a 13-bit binary counter, with a 4-bit sub-counter controlling the dual-modulus prescaler Q28 via the FB output.

Phase comparator 1 is an analogue phase detector, consisting of a ramp generator and a sample-and-hold amplifier. Whilst the sampling point is within the linear region of the ramp only this phase detector operates, but when its linear range is exceeded digital phase comparator 2 is enabled, and the OL (out of lock) output goes high.

The functions of Q29 are controlled by 8 internal 4-bit registers. These are loaded from the receiver's microcontroller through a 4-bit DATA bus, with register selection on the 3-bit ADDR bus. Input lines PE1, PE2 and /MEM select and control this mode of operation.

Q29 pin functions.

Pin	Name	I/O	State	Function	Pin	Name	I/O	State	Function
1	Vdd3		8V	8V Supply	15	DB3	In	L [H]	PLL D3, pulses high during tuning
2	PC1	Out	4V	Phase comparator 1 output	16	DB2	In	L [H]	PLL D2, pulses high during tuning
3	PC2	Out	4V	Phase comparator 2 output	17	DB1	In	L [H]	PLL D1, pulses high during tuning
4				No connection	18	DB0	In	H [L]	PLL D0, pulses low during tuning
5	CLK	Out	SIG	14 kHz CLOCK output, 8Vp-p	19	AD0	In	L [H]	PLL A0, pulses high during tuning
6	Vss		L	Ground	20	AD1	In	L [H]	PLL A1, pulses high during tuning
7	DIV	In	SIG	LO in, 3-5 MHz, 1Vp-p on 3.5V	21	AD2	In	L [H]	PLL A2, pulses high during tuning
8	Vdd2		H	5V Supply	22	PE2	In	L	Always low
9	FB	Out	SIG	Psc control, narrow low pulses	23	PE1	In	L [H]	STRB, Pulses high during tuning
10	OL	Out	L	Out - of - lock output	24	MOD			No connection
11	RESET	In	L	Reset, pulses high at switch-on	25	/MEM	In	L	Always low
12	XTAL	Out	SIG	672 kHz ref signal, no connection	26	BRB			No connection
13	OSC	In		672 kHz ref input, 2Vp-p on 4.5V	27	BRC	In	4.8V	Bias current
14	Vdd1		8V	8V Supply	28	BRA	In	6.2V	Bias current

D8749H Microcontroller, Q205, Q605 and Q705.

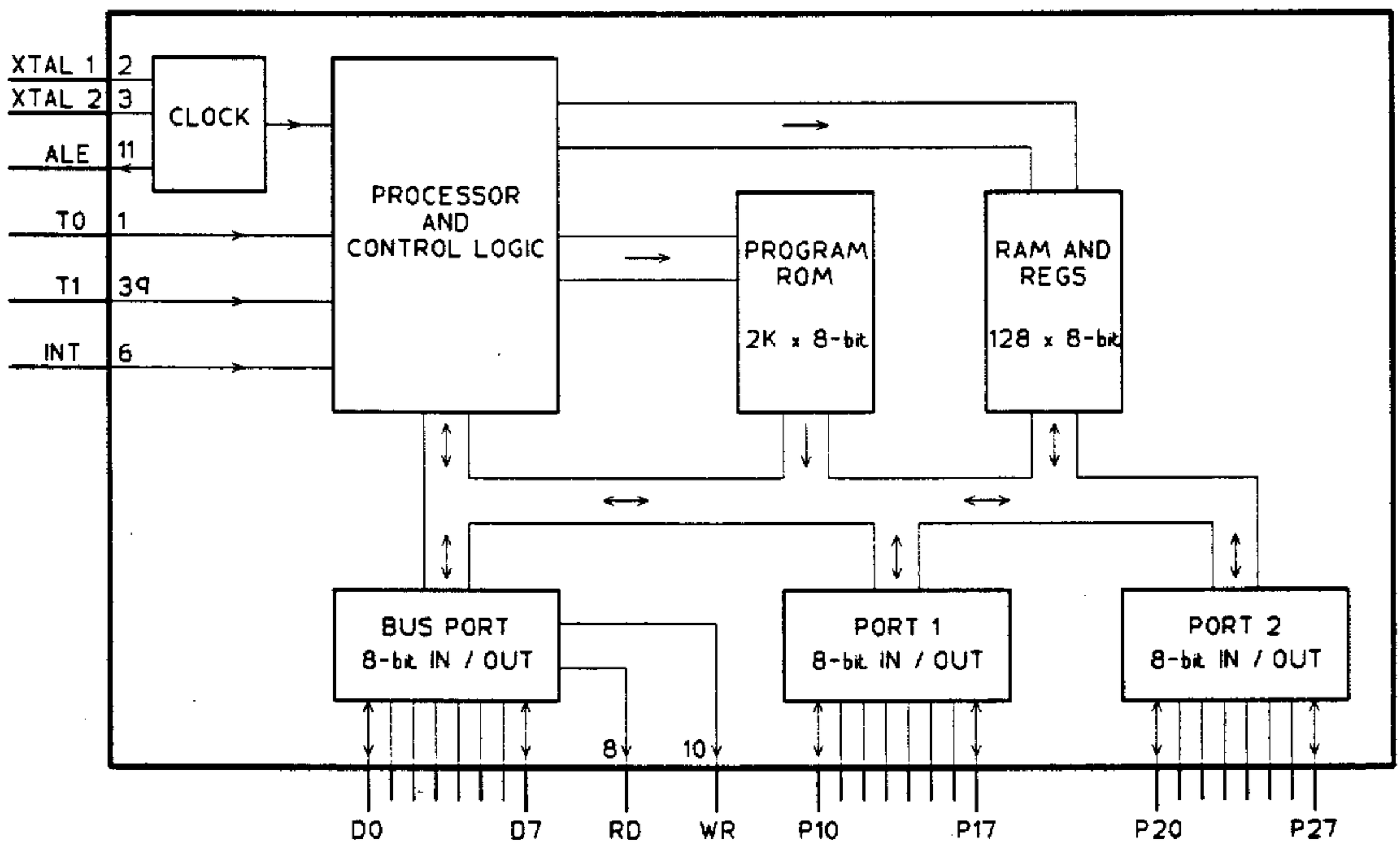

The D8749H contains all of the parts of a microprocessor control system. All input and output is done via three 8-bit ports, and no microprocessor bus signals come out of the chip. The ports can be configured for input or output or used bi-directionally. When used as inputs there is an internal pull-up resistor within the chip. In the HF-235 the BUS PORT is used only for output since this can provide a useful amount of current drive, both source and sink.

Q205 pin functions. (RED code)

Pin	Name	I/O	State	Function	Pin	Name	I/O	State	Function
1	T0	In	L / H	Mode, high for CW, LSB and USB	21	P20	I/O	H [L]	RAM data bit 0 and keypad data
2	XTL1	In	SIG	Crystal osc input	22	P21	I/O	H [L]	RAM data bit 1 and remote control
3	XTL2	Out	SIG	Crystal osc, 3Vp-p, 10 MHz	23	P22	I/O	H [L]	RAM data bit 2
4	/RES	In	H	Reset input, low at switch-on	24	P23	I/O	H [L]	RAM data bit 3
5	/SS	In	H	Always high	25	PROG	Out	H	No connection
6	/INT	In	L / H	Mode input, high for CW and AM	26	Vdd		H	5V Supply
7	EA	In	L	Always low	27	P10	In	H [L]	MEMORY button
8	/RD	Out	H [L]	RAM /WR, pulses for RAM write	28	P11	In	H [L]	ATTEN button
9	/PSEN	Out	H	No connection	29	P12	In	H [L]	FILTER button
10	/WR	Out	H [L]	CLK, pulses low during tuning	30	P13	In	H [L]	MHz DOWN button
11	ALE	Out	SIG	672 kHz REF signal, 3Vp-p	31	P14	In	H [L]	MHz UP button
12	DB0	Out	L [H]	External RAM address, bit 0	32	P15	In	L / H	Low if JP1 linked (FAX mode)
13	DB1	Out	H [L]	External RAM address, bit 1	33	P16	In	L / H	Tuning encoder phase A
14	DB2	Out	H [L]	External RAM address, bit 2	34	P17	In	L / H	Tuning encoder phase B
15	DB3	Out	L [H]	External RAM address, bit 3	35	P24	Out	L [H]	Display driver data
16	DB4	Out	L [H]	External RAM address, bit 4	36	P25	Out	H [L]	RAM /RD, low for mem recall etc
17	DB5	Out	L [H]	External RAM address, bit 5	37	P26	Out	L [H]	STRB, pulses high during tuning
18	DB6	Out	L [H]	External RAM address, bit 6	38	P27	Out	L / H	DATA, changes during tuning
19	DB7	Out	L [H]	External RAM address, bit 7	39	T1	In	L / H	Mode input, high for USB and AMS
20	Vss		L	Ground	40	Vcc		H	5V Supply

Q605 pin functions. (High stability option - BLUE code)

Pin	Name	I/O	State	Function	Pin	Name	I/O	State	Function
1	T0	In	L	Always low	21	P20	In	L	Always low
2	XTL1	In	SIG	Ref signal input, 4Vp-p, 10MHz	22	P21	In	L	Always low
3	XTL2	Out	SIG	No connection	23	P22	In	L	Always low
4	/RES	In	H	Reset input, low at switch-on	24	P23	In	L	Always low
5	/SS	In	H	Always high	25	PROG	Out	H	No connection
6	/INT	In	L	Always low	26	Vdd		H	5V Supply
7	EA	In	L	Always low	27	P10	In	L/H	HET tune data bit 0
8	/RD	Out	H	No connection	28	P11	In	L/H	HET tune data bit 1
9	/PSEN	Out	H	No connection	29	P12	In	L/H	HET tune data bit 2
10	/WR	Out	H	No connection	30	P13	In	L/H	HET tune data bit 3
11	ALE	Out	SIG	672 kHz REF signal, 3Vp-p	31	P14	In	L/H	HET tune data bit 4
12	DB0	Out	H [L]	Pulses low to pump-down HET	32	P15	In	L/H	HET tune data bit 5
13	DB1	Out	L [H]	Pulses high to pump-up HET	33	P16	In	L/H	HET tune data bit 6
14	DB2	Out	L	No Connection	34	P17	In	L	Always low
15	DB3	Out	L	No Connection	35	P24	In	L	Always low
16	DB4	Out	L	No Connection	36	P25	In	L	Always low
17	DB5	Out	L	No Connection	37	P26	In	L	Always low
18	DB6	Out	L	No Connection	38	P27	In	L	Always low
19	DB7	Out	L	No Connection	39	T1	In	SIG	Counter input, 4Vp-p, 190 kHz
20	Vss		L	Ground	40	Vcc		H	5V Supply

Q705 pin functions. (Remote control option - GREEN code)

Pin	Name	I/O	State	Function	Pin	Name	I/O	State	Function
1	T0	In	L [H]	AGC A to D pulse	21	P20	I/O	H [L]	RC0, serial data to main processor
2	XTL1	In	SIG	Crystal osc input	22	P21	Out	H [L]	RC1, serial data control
3	XTL2	Out	SIG	Crystal osc, 3Vp-p, 10 MHz	23	P22	Out	H [L]	RES, reset to main processor
4	/RES	In	H	Reset input, low at switch-on	24	P23	In	L/H	BDR, high for 1200 baud
5	/SS	In	H	Always high	25	PROG	Out	H	No connection
6	/INT	In	L/H	High for LSB, low for FAX	26	Vdd		H	5V Supply
7	EA	In	L	Always low	27	P10	In	L/H	MD0, mode switch bit 0
8	/RD	Out	H [L]	MC, pulses low for mode change	28	P11	In	L/H	MD1, mode switch bit 1
9	/PSEN	Out	H	No connection	29	P12	In	L/H	MD2, mode switch bit 2
10	/WR	Out	H	No connection	30	P13	In	L/H	RA0, receiver address bit 0
11	ALE	Out	SIG	No connection	31	P14	In	L/H	RA1, receiver address bit 1
12	DB0	Out	L/H	MD, serial data for mode reg	32	P15	In	L/H	RA2, receiver address bit 2
13	DB1	Out	L [H]	MS, pulses high for mode change	33	P16	In	L/H	RA3, receiver address bit 3
14	DB2	Out	L/H	High to mute receiver	34	P17	In	L/H	RA4, receiver address bit 4
15	DB3	Out	H [L]	Pulses low for A to D cycle	35	P24	I/O	L/H	P0, control port bit 0
16	DB4	Out	H [L]	Serial data out	36	P25	I/O	L/H	P1, control port bit 1
17	DB5	Out	H [L]	ditto	37	P26	I/O	L/H	P2, control port bit 2
18	DB6	Out	L/H	Low to select receiver on bus	38	P27	I/O	L/H	P3, control port bit 3
19	DB7	Out	L/H	ditto	39	T1	In	L [H]	Serial data input
20	Vss		L	Ground	40	Vcc		H	5V Supply

MC14569BCP Programmable divider, Q209.

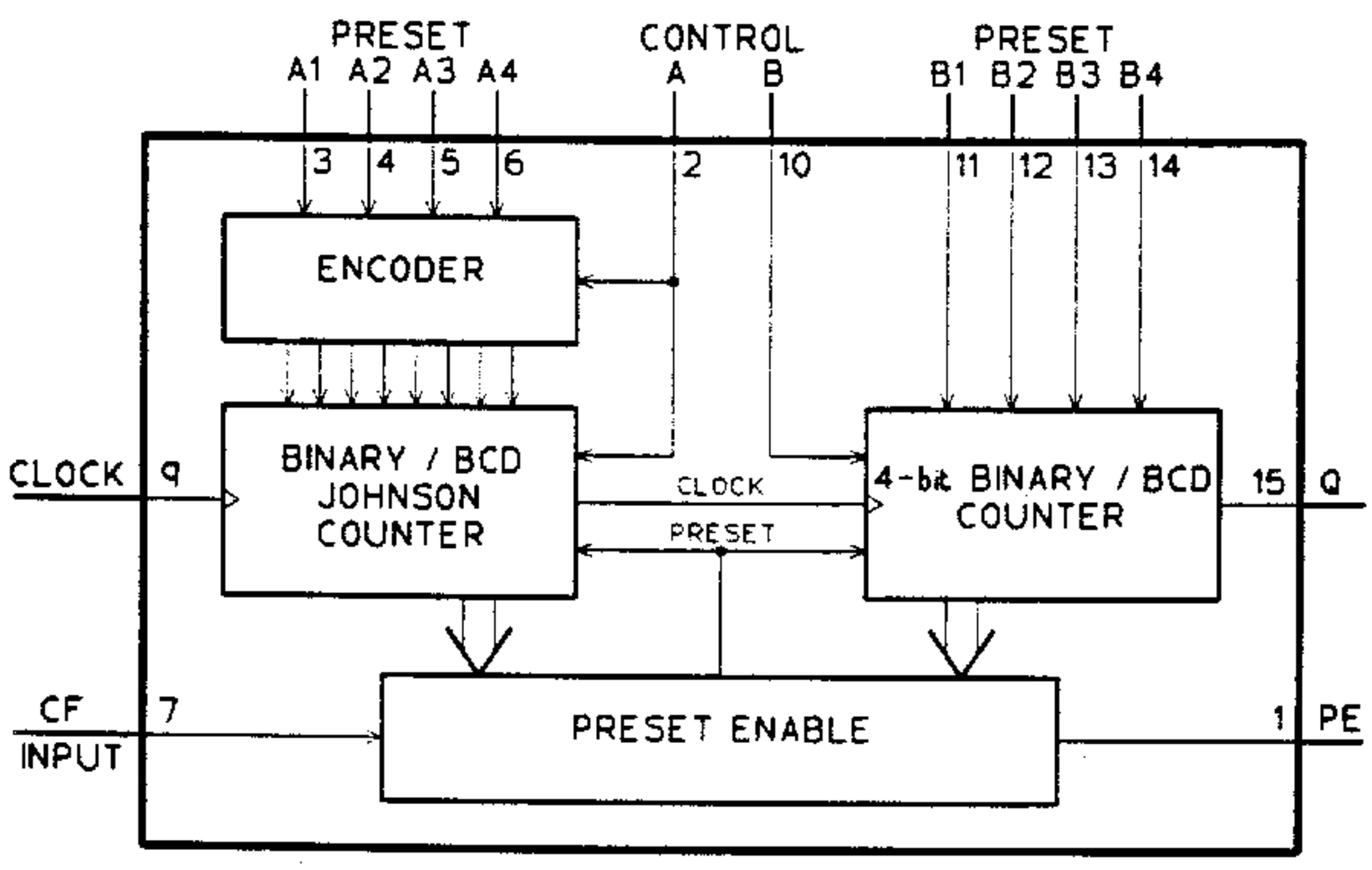

The MC14569 contains two 4-bit BCD / binary down-counters that are preset from eight external inputs when the count reaches zero. In the HF-235 the chip is configured to work as a single 8-bit programmable divider. Each time the counter is preset, a pulse one clock cycle wide is produced on the PE output, this signal therefore contains many high-order harmonics of the divider output frequency. The counter is only operated when the receiver is in SSB or CW mode.

Q209 pin functions.

Pin	Name	I/O	State	Function	Pin	Name	I/O	State	Function
1	PE	Out	SIG	Counter output (see section 2.1)	9	Clock	In	SIG	2.52 MHz clock
2	CtrlA	In	L	Always low	10	CtrlB	In	L	Always low
3	PR0	In	L	Preset bit 0, always low	11	PR4	In	H	Preset bit 4, always high
4	PR1	In	H	Preset bit 1, always high	12	PR5	In	L/H	Preset bit 5, low for CW
5	PR2	In	L/H	Preset bit 2, high for USB	13	PR6	In	H	Preset bit 6, always high
6	PR3	In	L/H	Preset bit 3, low for CW	14	PR7	In	H	Preset bit 7, always high
7	CF	In	H	Always high	15	Q	Out	SIG	No connection
8	Vss		L	Ground	16	Vdd		H	5V supply

SL6440CDP High level mixer, Q1, Q2, Q601 and Q5 in D-225.

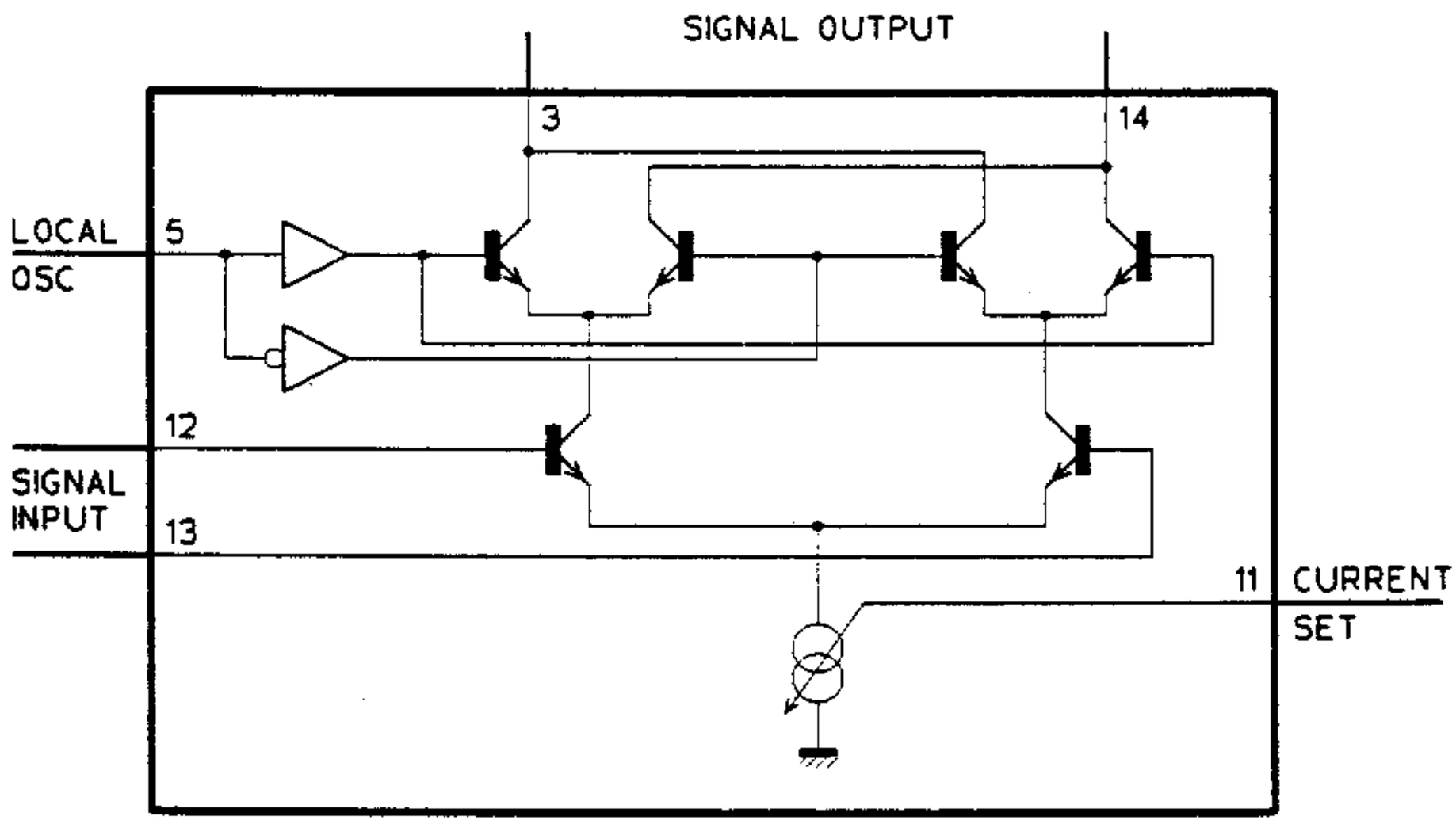

The SL6440 integrated circuit, double-balanced mixer combines good strong signal performance and low noise. The mixer has balanced inputs and outputs, but either may be used unbalanced; in the HF-235 two configurations are found. Q1, the first mixer, uses balanced inputs and outputs to obtain maximum gain and lowest noise and distortion. The other applications use the chip with single, unbalanced input and output lines.

The mixer performance can be adjusted by an external current source into the IP pin, and the best balance of noise, intermodulation and supply current drain can be set. An amplifier for the local oscillator signal is included on the mixer chip.

Pins 1, 2, 7, 8, 9, 10, 15 and 16 are used for thermal bonding only, and are not connected within the mixer IC. In the HF-235 they are bonded to the PCB ground plane.

Q1 pin functions.

Pin	Name	DC Voltage	Signal	Function
3	Output A	14.0V	Some LO (<50 mV)	45 MHz IF output
4	Vcc	7.8V	None	Mixer supply
5	LO in	2.0V	LO 1Vp-p	45 to 75 MHz local oscillator input
6	0V	0V	None	Ground connection
11	IP	3.3V	None	Current program input
12	Input B	5.4V	Slight LO (<10 mV)	RF signal input
13	Input A	5.4V	Slight LO (<10 mV)	RF signal input
14	Output B	14.0V	Some LO (<50 mV)	45 MHz IF output

Q2 pin functions.

Pin	Name	DC Voltage	Signal	Function
3	Output A	7.5V	Some HET (<20 mV)	Unused output
4	Vcc	6.0V	None	Mixer supply
5	LO in	2.1V	HET 400mVp-p	44.545 MHz heterodyne oscillator input
6	0V	0V	None	Ground connection
11	IP	1.6V	None	Current program input
12	Input B	3.9V	None	Unused input
13	Input A	3.9V	Slight HET (<5 mV)	45 MHz IF input
14	Output B	7.5V	Some HET (<20 mV)	455 kHz IF output

Q601 pin functions. (High stability option)

Pin	Name	DC Voltage	Signal	Function
3	Output A	6.6V	HET 1Vp-p	Unused output
4	Vcc	5.9V	None	Mixer supply
5	LO in	2.2V	REF 150mVp-p	672 kHz square wave reference input
6	0V	0V	None	Ground connection
11	IP	1.7V	None	Current program input
12	Input B	3.9V	HET 0.5Vp-p	44.5 MHz HET oscillator signal input
13	Input A	3.9V	None	Unused input
14	Output B	7.8V	IF 0.5Vp-p	190 kHz IF output

Q5 in D-225 pin functions. (Receiver in AMS mode)

Pin	Name	DC Voltage	Signal	Function
3	Output A	7.6V	Audio + 910 kHz	Unused output
4	Vcc	6.1V	None	Mixer supply
5	LO in	2.1V	455 kHz 100mVp-p	Synchronised oscillator input
6	0V	0V	None	Ground connection
11	IP	1.6V	None	Current program input
12	Input B	4.0V	455 kHz 150mVp-p	455 kHz IF signal input
13	Input A	4.0V	None	Unused input
14	Output B	7.6V	Audio + 910 kHz	AMS audio output 200mVp-p

SL6700C IF amplifier and AM detector, Q3.

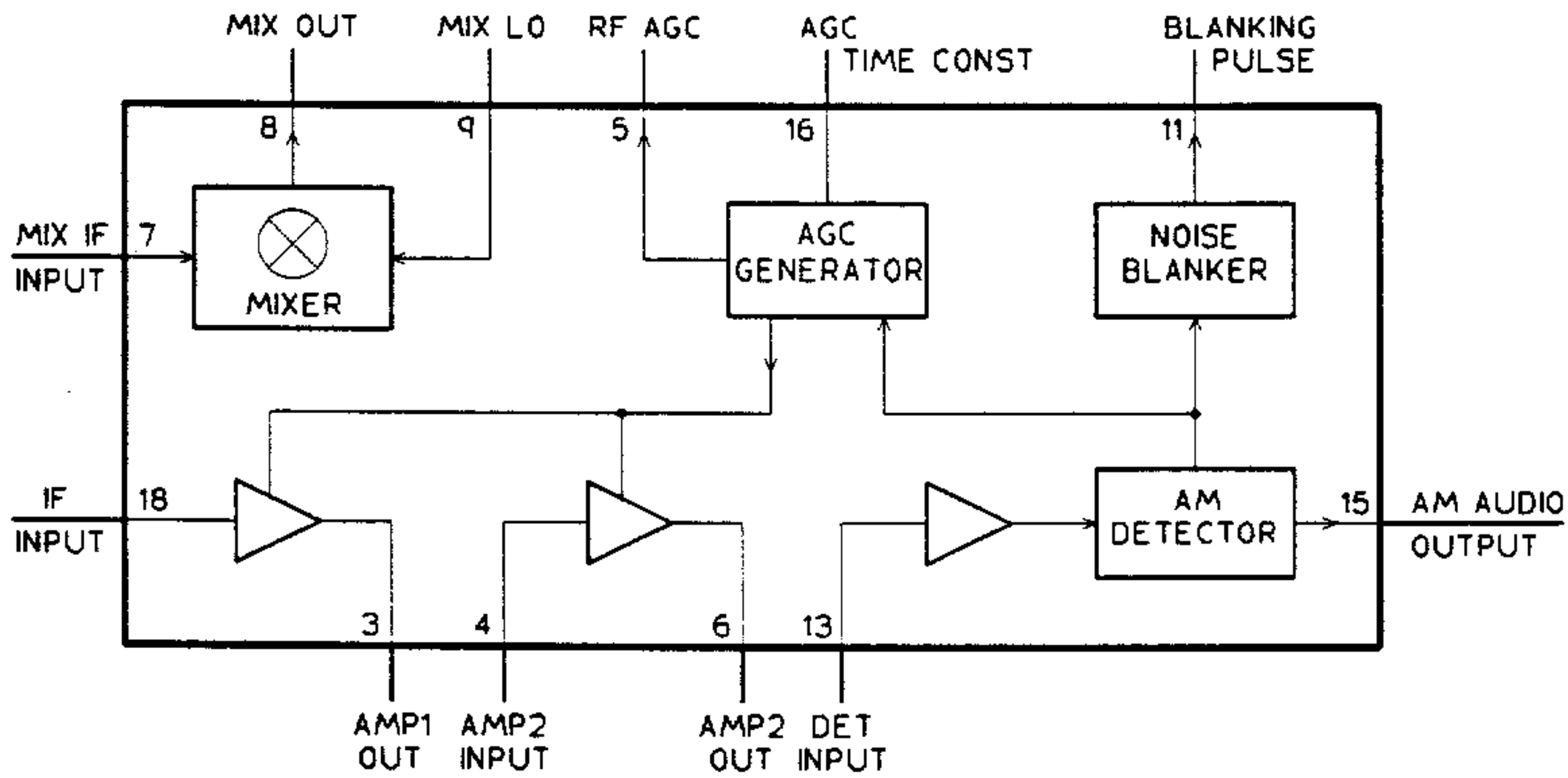

The two IF amplifiers in this chip are both broad-band devices offering about 25dB of gain with AGC control. AGC is produced internally from the AM detector, and these two amplifiers give a combined AGC range of 80dB. A level comparator on the AGC line produces a delayed AGC output for RF stages on pin 5. The value of the resistor between pins 1 and 2 sets the delay threshold.

A full-wave detection system is employed, giving excellent linearity and producing a DC carrier level output to derive AGC. This level can also trigger the noise-blanker monostable. Before the detector is a third IF amplifier with a gain of about 46 dB. The product detector is a double-balanced modulator which operates independently of any other circuits on the chip. In the HF-235 it is used only for SSB and CW reception.

Q3 pin functions. (Levels for USB mode, S9 input signal resolved at 1 kHz)

Pin	Name	DC Voltage	Signal	Function
1	AGC dcpl	2.3V	None	RF AGC decoupling pin
2	AGC bias	2.3V	None	RF AGC threshold adjust resistor
3	AMP1 out	3.6V	IF 10mVp-p	1st IF amplifier output
4	AMP2 in	0.8V	IF 4mVp-p	2nd IF amplifier input
5	Del AGC	0.0V	None	AGC to RF stage
6	IF output	4.2V	IF 2mVp-p	2nd IF amplifier output
7	Mixer in	1.5V	IF 1.5mVp-p	Product detector IF input
8	Mixer out	4.0V	Audio 10mVp-p	SSB audio output
9	LO input	1.5V	CAR 200mVp-p	Product detector CAR osc input
10	Vcc	5.0V	None	5V Supply
11	NB out	0.0V	None	Noise blanker monostable output
12	NB timer	0.0V	None	Monostable R/C
13	Det input	0.8V	IF 1.5mVp-p	AM / AGC detector IF input
14	Decoupling	1.5V	None	AM detector decoupling pin
15	Audio out	0.9V	Some audio	AM audio output
16	AGC dcpl	2.3V	None	AGC level output, AGC time constant
17	Gnd	0V	None	Ground connection
18	IF input	0.8V	IF 2mVp-p	1st IF amplifier input

MC3357P Narrow band FM detector, Q3 in D-225.

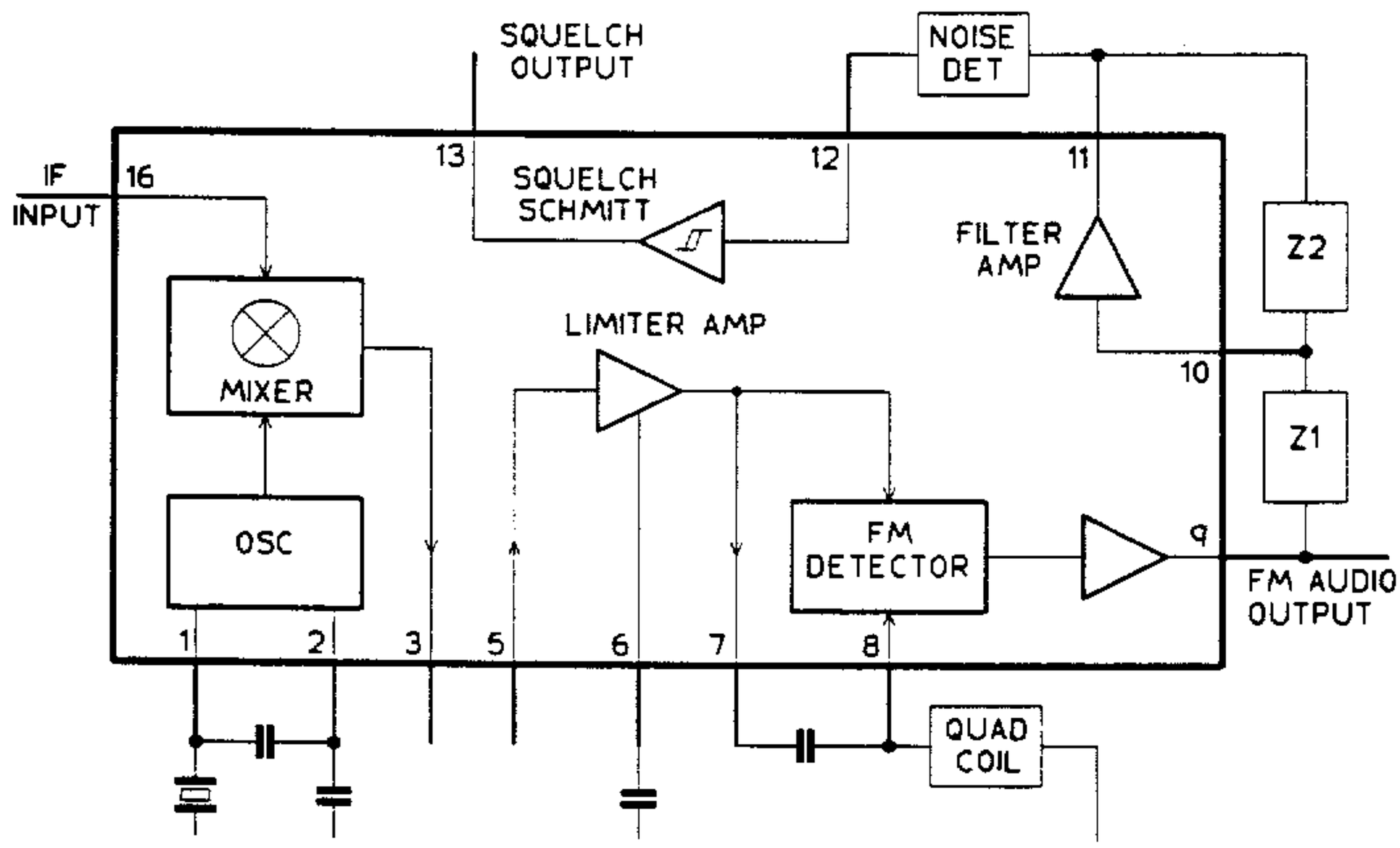

The MC3357P contains an IF conversion mixer, a limiter amplifier and a quadrature FM detector. In the D-225 detector unit, the mixer is used as a phase detector for the AMS system, and takes its IF signal from the output of the limiter amplifier.

The FM demodulator has two inputs, one fed directly from the limiter amplifier, and the other fed via a frequency sensitive phase-shift network - a ceramic quadrature element is used in the D-225. The two signals are multiplied to give the FM audio signal which then requires de-emphasis. The limiter amplifier removes AM modulation from the incoming IF signal.

The internal audio amplifier is configured as a high-pass filter using external reactive components and samples the audio output to drive the squelch detector and trigger. A Schmitt trigger between pins 12 and 13 prevents squelch jitter.

Q3 in D-225 pin functions. (Levels for AMS mode, S9 input signal modulated at 1 kHz)

Pin	Name	DC Voltage	Signal	Function
1	Osc input	7.9V	455 kHz 1.5Vp-p	Sync CAR oscillator feedback pin
2	Osc output	7.3V	455 kHz 1Vp-p	Sync CAR oscillator output, 455 kHz
3	Mixer out	7.5V	910 kHz 500mVp-p	Sync phase detector output (DC component)
4	Vcc	8.0V	None	8V supply
5	Limiter in	1.1V	IF signal 100mVp-p	455 kHz IF input to limiter amplifier
6	Decoupling	1.1V	None	Limiter amp decoupling pin
7	Limiter out	1.1V	IF 400mVp-p clipped	Limited 455 kHz IF output
8	Quad in	8.0V	IF 100mVp-p pulses	Quadrature detector IF input
9	Demod out	4.1V	IF 500mVp-p pulses	FM audio output
10	Filter in	2.0V	None	Audio noise filter feedback input
11	Filter out	2.0V	AF noise 4Vp-p	Audio noise filter output
12	Squelch in	0.0V	None	DC input to squelch Schmitt trigger
13	Squelch out	7.5V	None	Squelch switch logic output (L to mute)
14	Mute	0.0V	None	No connection
15	Gnd	0V	None	Ground connection
16	Mixer in	2.0V	IF 400mVp-p clipped	455 kHz IF input to sync phase detector

Signal levels.

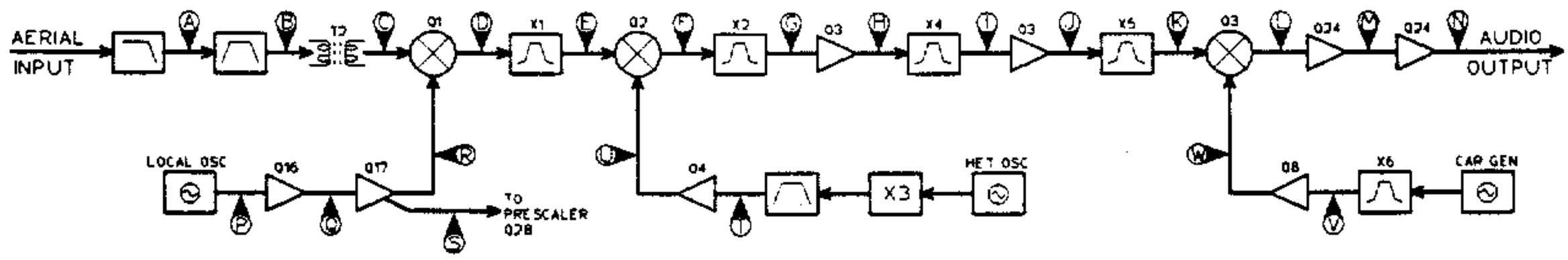

The signal levels shown here can provide a useful fault finding guide to a partially working receiver, however there are a few points to beware of. All signal levels were measured with a high-impedance probe and a frequency selective level meter. The signals at the outputs of mixers are often swamped by oscillator feed-through and so cannot be measured with a broad-band voltmeter.

The specified input signal level of 50 uV drives the AGC system to reduce the gain of the two IF amplifiers, the RF AGC system should still be at full gain. Because of threshold and gain variations within the IF amplifier chip there may be deviations from the stated signal levels in the 455 kHz IF chain without any fault present.

Signal levels and frequencies.

Receiver settings:-

Mode	USB
Frequency	14.200 MHz
Filter	2.2 kHz
Atten	Off
IF Gain	Max, AGC on
Input signal	14.201 MHz at 50 uV (-73 dBm)

Point	Connection	Frequency	Level (rms)	Comments
A	D1 Anode	14.201 MHz	40 uV	Band-pass filter input
B	D5 Anode	14.201 MHz	30 uV	Band-pass filter output
C	Q1 pins 12 & 13	14.201 MHz	65 uV	1st mixer input (same signal on both pins)
D	Q1 pin 3	45.000 MHz	750 uV	1st mixer 45 MHz IF output
E	Q2 pin 13	45.000 MHz	650 uV	45 MHz IF filter output / 2nd mixer input
F	Q2 pin 14	455.4 kHz	1.3 mV	2nd mixer 455 kHz IF output
G	Q3 pin 18	455.4 kHz	500 uV	2.2 kHz filter output
H	Q3 pin 3	455.4 kHz	3.3 mV	1st IF amplifier output
I	Q3 pin 4	455.4 kHz	1.3 mV	4 kHz filter output
J	Q3 pin 6	455.4 kHz	700 uV	2nd IF amplifier output
K	Q3 pin 7	455.4 kHz	350 uV	10 kHz filter output
L	Q3 pin 8	1 kHz	3.3 mV	Product detector output
M	Q24 pin 1	1 kHz	380 mV	1st audio preamplifier output
N	Q24 pin 7	1 kHz	580 mV	2nd audio preamplifier output
P	Q16 base	59.201 MHz	150 mV	Local oscillator output
Q	Q16 collector	59.201 MHz	70 mV	Buffer amplifier output
R	Q1 pin 5	59.201 MHz	750 mV	Local oscillator mixer injection
S	Q28 pin 2	59.201 MHz	130 mV	Local oscillator feed to PLL prescaler
T	Q4 base	44.5446 MHz	14 mV	HET oscillator tripler output
U	Q2 pin 5	44.5446 MHz	280 mV	HET oscillator mixer injection
V	Jn R48 / R49	456.4 kHz	2.2 mV	CAR comb filter output
W	Q3 pin 9	456.4 kHz	70 mV	CAR injection to product detector

Test and alignment.

Equipment required:- Frequency counter to operate to 50 MHz.
DVM to measure 10V DC.
HF signal generator with calibrated output.
Audio SINAD meter.
Oscilloscope (for high stability option only).

Location of test points and adjustments.

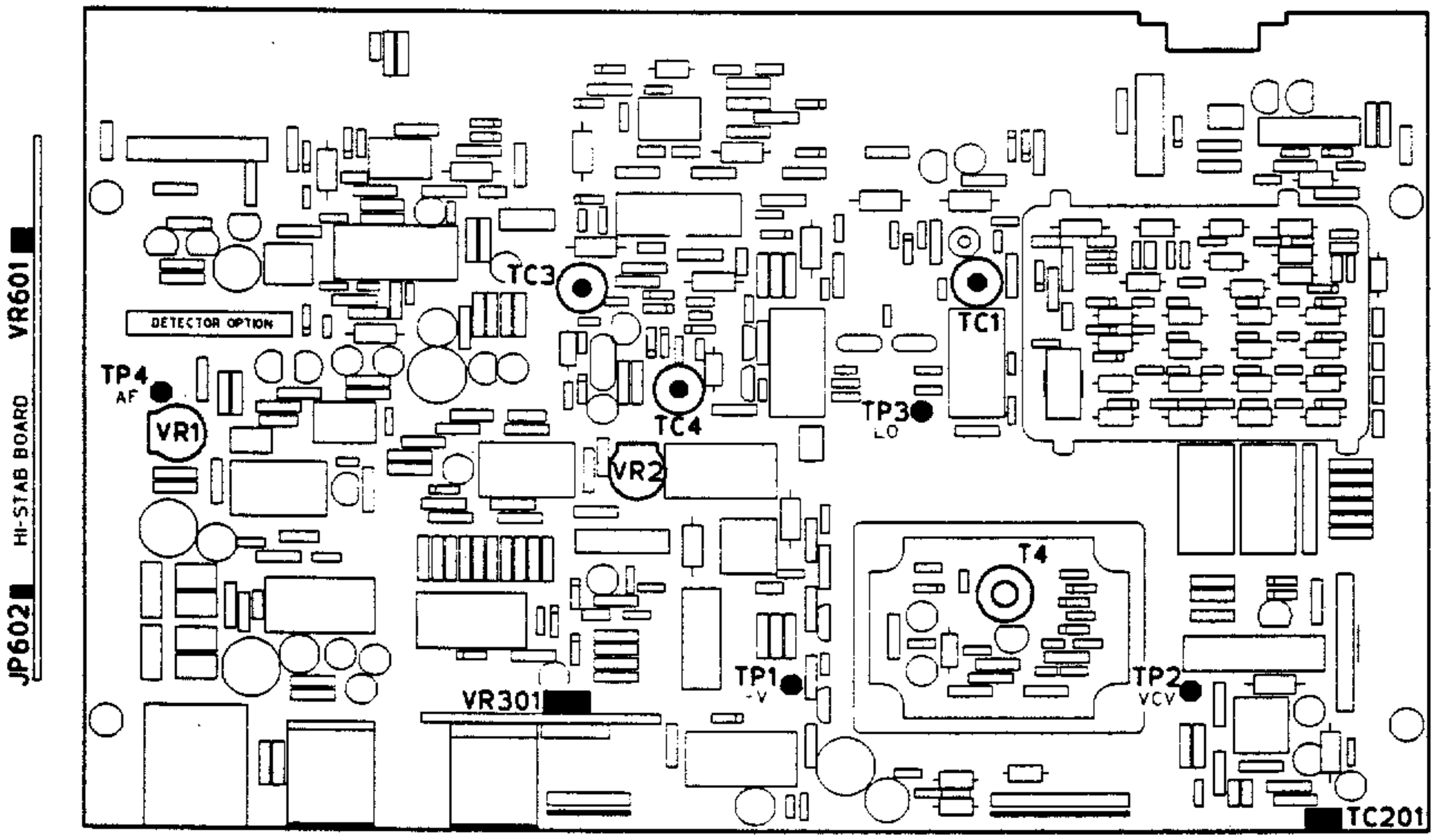

Many of the tests and alignments described here depend on the correct operation and adjustment of other sections of the receiver. It is strongly recommended that this procedure is performed in the order below, and any faults found are rectified before continuing.

1) Control unit test.

Severe faults in the control system will result in a blank display (no 5V power or faulty display driver) or a display with all segments showing (no microcontroller activity or serial bus fault). If the test routines will run and a malfunction is detected, the display will show the fault symbol **FLT**. The sequence of events before the fault symbol appears can give an indication of the area where the fault was detected.

A fault indication when the receiver is switched on, or during normal operation, is almost certainly due to an internal fault within the microcontroller. Fault indications during test mode apply to the current test selected.

1.1 Microcontroller function and display driver test.

Switch on the receiver with the **MEMORY** button pressed, then release the button.
The display should show the **TEST** message if the microcontroller, serial bus and display are functioning correctly.

1.2 Frequency memory (RAM chip, Q204) test.

This test will erase any frequencies held in the memories of the receiver, and will preset them with standard frequencies useful for the alignment procedures to follow. The test may be omitted to preserve the memory contents.

With the **TEST** message displayed, press the **ATTEN** button.
The display should continue to show the **TEST** message.
Note that the test is continuously repeated until the button is released or a fault is detected.

2) Reference oscillator adjustment.

2.1 With the **TEST** message displayed, press the **FILTER** button.
Connect a frequency counter to **TP3** (Local Osc).

2.2 For a standard receiver, without the high stability option,
adjust **TC201** (on the control unit) for a reading of 45.0000 MHz +/- 20 Hz.

2.3 For a receiver fitted with the high stability option,
adjust **VR601** (on the high-stab unit) for a reading of 45.0000 MHz +/- 5 Hz.

If a stable 45 MHz cannot be obtained check the reference frequency on Q29 pin 13 which should be 672.000 kHz. If this is correct, then the local oscillator, PLL or its control system is at fault. To aid fault finding on the PLL control system, PLL programming data is continuously sent to Q29 whilst the **FILTER** button is held.

3) Heterodyne oscillator adjustment.

3.1 If the high stability option is fitted, then remove jumper JP602 (on the high-stab board) before carrying out this adjustment. Replace the jumper when adjustment is complete and then check the frequencies in sections (3.3) and (3.4).

3.2 With the **TEST** message displayed, select USB mode.
Connect a frequency counter to **TP4** (Audio).
Set **TC4** to mid-position.

3.3 Press the **FILTER** button.
Adjust **TC3** for a reading of 1378 Hz +/- 10 Hz.

3.4 Press the **MHz DOWN** button.
Adjust **VR2** for a reading 8 Hz above that in (3.2) above.

3.5 Repeat (3.3) and (3.4).

Note that it may be possible to obtain two adjustment positions of **TC3** to satisfy (3.3), but only one will enable adjustment (3.4) to be made.

The remaining alignment procedures require the receiver to operate in its normal mode. Press the **MHz UP** button to exit test mode.

4) Local oscillator adjustment.

The only adjustment in the local oscillator is the physical layout of the windings on the oscillator coil T4. The coil is factory aligned and then potted in hot-melt adhesive - it is unlikely that any further adjustment will be necessary. It is suggested that the following functional checks are made, and the adjustments only performed if absolutely necessary.

4.1 Local oscillator alignment test.
This test should be performed with the diecast box in place around the oscillator circuit. Following the frequency memory test above, the receiver frequencies used in this test are programmed into the memory numbers shown.

Connect a DVM between **TP1** (-V) and **GROUND**.
Check that the voltage on TP1 is -1.9V +/- 0.1V (ie below ground potential).

4.2 Connect a DVM between **TP2** (VCO control) and **GROUND**.
Check the voltage on TP2 for receiver frequency settings shown below:-

Frequency	Memory	TP2 Voltage
29.900 MHz	1	< 7.0 V
19.000 MHz	2	> 1.5 V
18.999 MHz		< 7.0 V
11.000 MHz	3	> 1.5 V
10.999 MHz		< 7.0 V
5.000 MHz	4	> 1.5 V
4.999 MHz		< 7.0 V
100 kHz	5	> 1.5 V

4.3 Local oscillator coil adjustment.
Remove the oscillator diecast box and the potting around T4. Use a hot air gun to melt the potting compound.

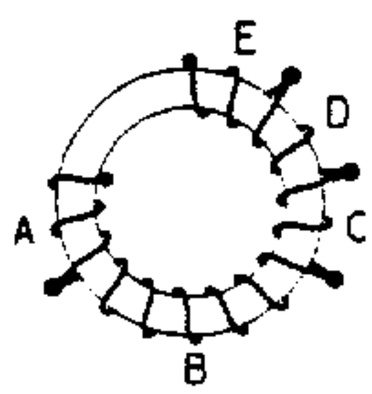

Oscillator coil T4 sections.

A = 3 turns
B = 6 turns
C = 2 turns
D = 2 turns
E = 2 turns

Connect a DVM between **TP2** (VCO control) and **GROUND**.
Space the turns in section B of the coil evenly.

4.3 a Tune to 29.900 MHz, adjust coil section A for 6.5 V on TP2.
4.3 b Tune to 19.000 MHz, check voltage on TP2 is > 1.5 V.
4.3 c Tune to 18.999 MHz, adjust coil section C for < 6.5 V on TP2.
4.3 d Tune to 11.000 MHz, check voltage on TP2 is > 1.5 V.
4.3 e Tune to 10.999 MHz, adjust coil section D for < 6.5 V on TP2.
4.3 f Tune to 5.000 MHz, check voltage on TP2 is > 1.5 V.
4.3 g Tune to 4.999 MHz, adjust coil section E for < 6.5 V on TP2.
4.3 h Tune to 100 kHz, check voltage on TP2 is > 1.5 V.
4.3 i Check the TP2 voltage falls within the 6.5 V and 1.5 V limits for all of the above frequencies.

If any of the voltages on TP2 fall below 1.5 V, then slide the turns in section B of the coil towards the C section, and repeat the adjustment from section (4.3 a).

4.4 Repot the oscillator coil with hot-melt adhesive, and refit the diecast oscillator box. Be sure to locate the cover under the PCB correctly so that the cut out edges fit over the PCB tracks. When the coil and oscillator circuit has cooled to room temperature, carry out the checks in (4.1) and (4.2) above.

5) I F alignment.

5.1 Connect a signal generator to the antenna input socket.
Inject 5 uV at 14.000 MHz modulated with 70% AM at 1kHz.
Tune the receiver to 14.000 MHz (memory 11) and select AM mode.

Check that the receiver resolves the input signal at 1kHz.

5.2 Connect a SINAD meter to the EXT LS socket.
Set the volume and tone controls to mid-position.
Reduce the signal generator output to 0.5 uV.

Adjust **TC1** and **TC4** for maximum SINAD reading.
Check that the SINAD reading is greater than 8 dB.

6) S-Meter & I F GAIN control adjustment.

6.1 From (5.2) above, increase the signal generator output to 160 uV.
Adjust **VR2** for an S-meter reading of S 9 +10 dB.

6.2 Remove the input signal and check that the S-meter returns to the S 1 position.

6.3 Pull out the **IF GAIN** control knob to turn AGC off, and set the control to mid-position.
Adjust **VR301** (behind the IF gain control) so that the S-Meter reads S 9.
Turn the **IF GAIN** control fully left and right, and check that the S-Meter covers full scale range.

7) Input filter check.

7.1 Connect a signal generator to the antenna input socket.
Inject a 1 uV signal modulated with 70% AM at 1kHz.
Connect a SINAD meter to the EXT LS socket.
Set the volume and tone controls to mid-position.

Tuning the receiver and signal generator together, check that the SINAD reading is greater than 10 dB at all of the frequencies listed below:-

4.200 MHz (memory 8)
4.199 MHz
11.000 MHz (memory 9)
10.999 MHz
19.000 MHz (memory 10)
18.999 MHz
29.900 MHz (memory 1)

7.2 Increase the generator output to 3 uV and check that the SINAD reading is greater than 10 dB at all of the frequencies listed below:-

1.700 MHz (memory 7)
1.699 MHz
500 kHz (memory 6)
499 kHz

8) AMS Detector.

8.1 Connect a signal generator to the receiver input. Apply a modulated AM signal at about 100 uV level.
Tune the receiver to exactly the same frequency as the generator (use the keypad).
Select AMS mode, and adjust the volume control so that an audible signal can be heard.

8.2 Adjust TC1 on the detector unit so that only the modulation is heard, with no superimposed beat note. There should be a small range of adjustment over which the beat note is not present. Rock the adjustment to establish this, and finally set TC1 in the centre of this range.

9) High Stability option check.

9.1 IF level check.
Connect and oscilloscope to **TP601** on the high stability option board.
Check that a signal of 4Vp-p, or greater, at about 190 kHz is present.

If the signal is clean, but of low amplitude, then a 68 pF capacitor should be added as C7a.
The value of the additional capacitor may be changed to maximise the signal level.

If the signal on **TP601** is poorly defined, then modify the value of R612, checking that the signal on pin 12 of Q604 (10 MHz) has a duty cycle of approximately 50%.

9.2 Operational check.
Monitor the voltage between **TP602** and **GROUND** with a DVM.
If the option is functioning and the HET oscillator is correctly aligned a reading between 2.0 to 2.5 volts is expected.

Place a small metallic object (eg blade of a screwdriver) on top of Q19 (HET Osc) on the main circuit board to de-tune the oscillator.
Ensure that the voltage on **TP602** changes slightly to correct the oscillator frequency, and returns to its original value when the metal is removed.

10) Remote Control option Signal Strength adjustment.

10.1 Connect a computer or dumb terminal to the remote control port, so that RSS? commands may be sent to the receiver, and the returned value observed. (See page 13)

Tune the receiver to 14.000 MHz and select AM mode, AGC on, IF Gain max.
Connect a signal generator to the antenna input, set to 14 MHz, unmodulated.
Set both **VR701** and **VR702** on the remote control board to mid-position.

10.2 Set the signal generator level to -80 dBm (22 uV).
Verify that the S-Meter reads around S 7.
Adjust **VR702** so that an RSS value of -80 (+/- 1) is sent.

10.3 Increase the signal generator level to -30 dBm (7.1 mV).
Adjust **VR701** so that an RSS value of -30 (+/- 1) is sent.

10.4 Repeat (10.2) and (10.3) until both values lie within +/- 1dB without adjustment.

Note that incorrect adjustment of VR701 or VR702 may cause the remote option to malfunction following an RSS? or INF? command. Correct operation can be restored by following the above procedure.

Disassembly.

Main Unit.

Access to the main RF unit involves only the removal of the top and bottom covers, each secured by four countersunk screws at the sides of the case.

Control Unit.

To work on the control unit, the front panel of the receiver must be removed :-

Unplug the connection between the control unit and the keypad circuit board.
Unsolder the two wires connected to the loudspeaker.
Remove the main tuning knob. (Use 2mm hexagon key.)
Remove the VOLUME, TONE and MODE knobs. (Prise off the arrowed cap and then loosen the collet screw.)
Remove the two screws holding the control unit brackets to the pillars attached to the front panel.
Remove the screws securing the front handles.
Carefully withdraw the front panel, removing the switch connector from the control unit as the panel separates from the receiver.

Special notes.

If the main PCB is removed from the chassis care should be taken to achieve correct placement when it is replaced. There should be a uniform gap of 10 mm between the front side of the control unit PCB and the rear of the front panel.

When the front panel is replaced make sure that the S-meter and headphone jack socket locate correctly in their holes without undue force.

Some receivers do not have pillars from the front panel to the control unit brackets. On these sets the front panel is secured by two pinch screws on the underside of the two chassis rails just behind the front panel. These should be loosened to remove the panel, and, after reassembly, tightened whilst the panel is pressed firmly against the rails.

Further disassembly.

The control unit may be separated from the main circuit board by removing the nuts securing the volume and tone controls and unsoldering the 6 and 10-way connectors from the control unit. Care should be taken here to avoid damaging the through-hole plating in the PCB. If the connectors cannot be desoldered cleanly, then cut through each pin to separate the boards and remove the pins individually. The connectors can then be replaced before reassembly.

The connection unit may be removed from the rear panel by first releasing the mounting bolt for Q504, extracting the insulating bush and silicone washer. Then remove the five screws securing the protective feet, the small screw below the antenna socket and the two screw-locks on the 25-way connector.

After replacing the connection unit, check that Q504 is insulated from the case with an ohm-meter.

Liquid crystal display.

The LCD is plugged into two sockets on the control unit, and may be removed by gently levering up first one end then the other. When replacing, locate the blue dot to the left hand side. Under the display, the light reflector is fixed with adhesive pads.

Case fastening details.

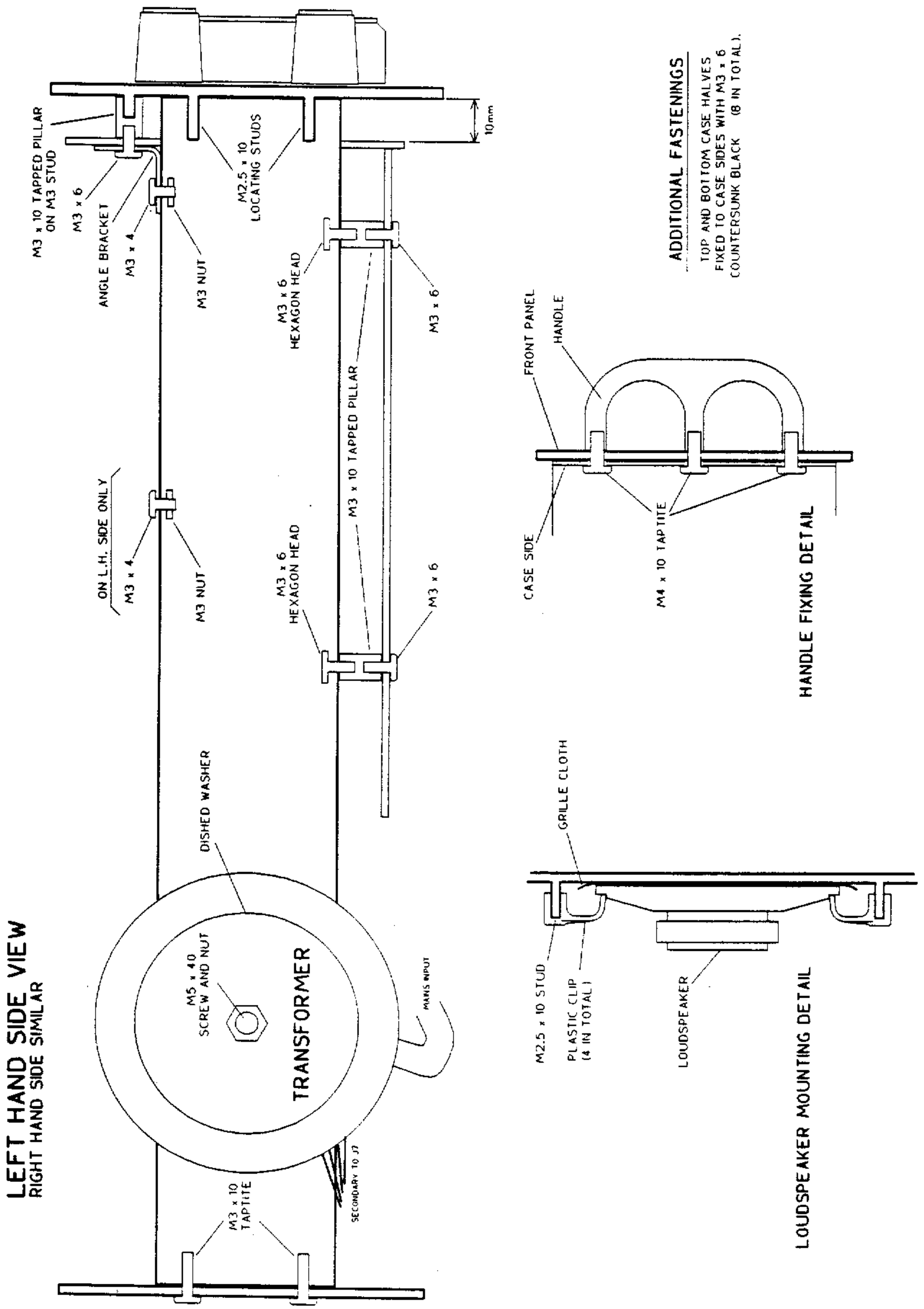

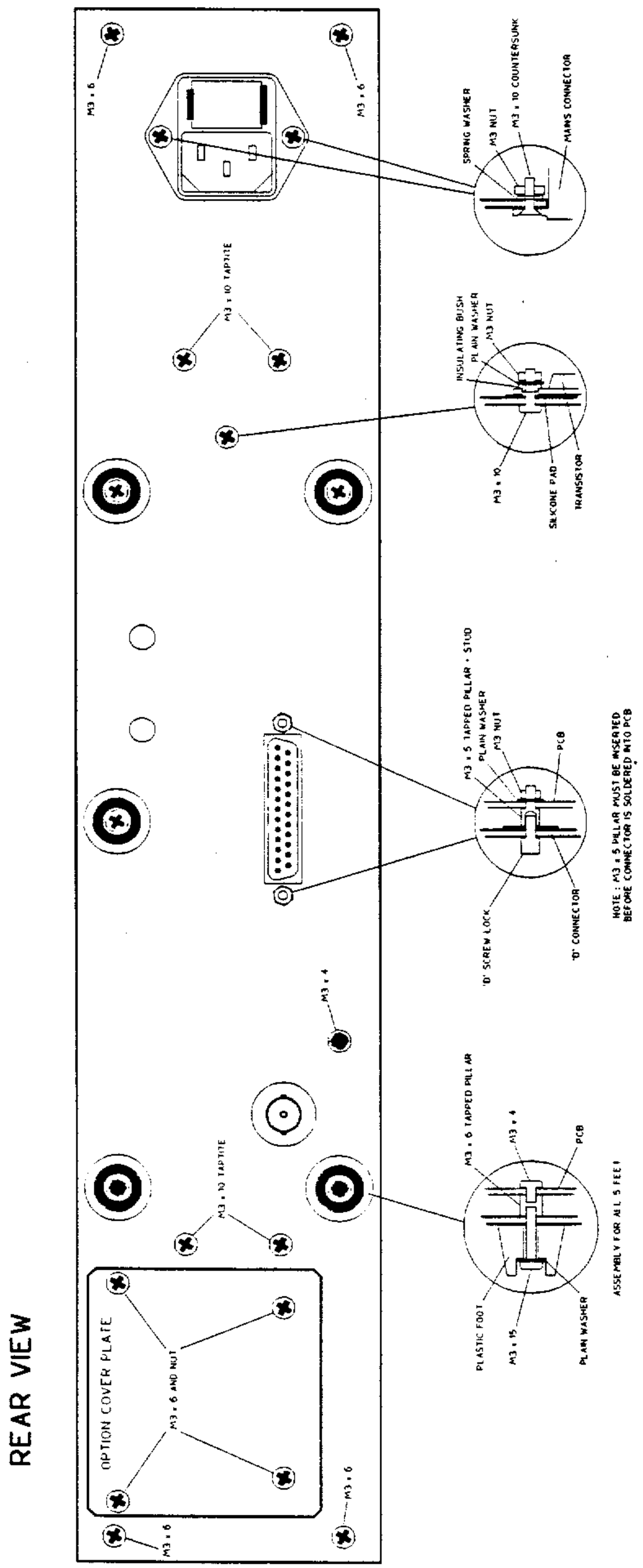
REAR VIEW
M3 x 6
M3 x 6
M3 x 10 TAPTITE
SPRING WASHER
M3 NUT
M3 x 10 COUNTERSUNK
MAINS CONNECTOR
INSULATING BUSH
PLAIN WASHER
M3 NUT
M3 x 10
SILICONE PAD
TRANSISTOR
M3 x 5 TAPPED PILLAR + STUD
PLAIN WASHER
M3 NUT
PCB
'D' SCREW LOCK
'D' CONNECTOR
NOTE : M3 x 5 PILLAR MUST BE INSERTED
BEFORE CONNECTOR IS SOLDERED INTO PCB
M3 x 4
M3 x 10 TAPTITE
M3 x 6 TAPPED PILLAR
M3 x 4
PCB
ASSEMBLY FOR ALL 5 FEET
OPTION COVER PLATE
M3 x 6 AND NUT
M3 x 6
M3 x 6
PLASTIC FOOT
M3 x 15
PLAIN WASHER

Option unit installation.

The top and bottom covers of the receiver should be removed to gain access for option unit fitting. The detector option is designed for user fitting, but the remote control and high stability options require considerable modification to the standard receiver and are recommended for factory fitting only. The information given here is intended as a guide to removing and replacing option units that have already been fitted. Please see the option schematic diagrams for details of electrical connections between the receiver and the option boards.

Detector Option. (D-225)

Unscrew the detector mounting screw from the nut in the left-hand case rail. Insert the detector unit into the main board, there are 10 pins on the unit to locate in the PCB. Slide the nut in the left-hand rail so that it is aligned with the right-angle bracket on the detector unit, and fasten the bracket with the screw. Check that the detector unit is vertical and at right-angles to the case side, then tighten both screws holding the unit. Finally solder the 10 pins to the main circuit board.

FAX Option.

The fax option is contained within the control unit, and consists of four additional components and several links. The additional component positions are marked on the PCB - all are near to the mode switch. The front panel of the receiver must be removed for access.

Additional components :-	R227, R228, R229	10 k ohms	R03-1030
	Q210	BC183L	Q01-1831

PCB links (on rear side of control unit) :-

Break link across R229.
Break two vertical links behind Q209
and remake as two horizontal links.

Wire links :-

From terminal marked 'FAX' on control unit
to the unconnected terminal on the lower side of the mode switch. (Third terminal from left)
If remote control option is fitted, then wire link should go to Q 701, pin 12 (on mode switch board), and the PCB link on the remote processor board should be in the 'FAX' position.
JP 201 (on right-hand edge of control unit) should be linked.

The fax option can be removed by restoring the PCB links to their original positions and removing the wire link to the mode switch. It is not necessary to remove any of the additional components, and the link across R229 should be left broken.

High stability option.

The high stability option circuit board fits onto the left-hand case rail in front of the mains transformer. Power and control signals are carried by a seven-way cable, plugged onto the main circuit board. Two screened cables carry the HET oscillator signal and the reference frequency.

The following diagram shows the fixing arrangement for the board. Additional nuts are required in the top T slot in the left-hand case rail to fix the two upper brackets. Note particularly the position of the insulating fibre washer between the main circuit board and the lower supporting bracket.

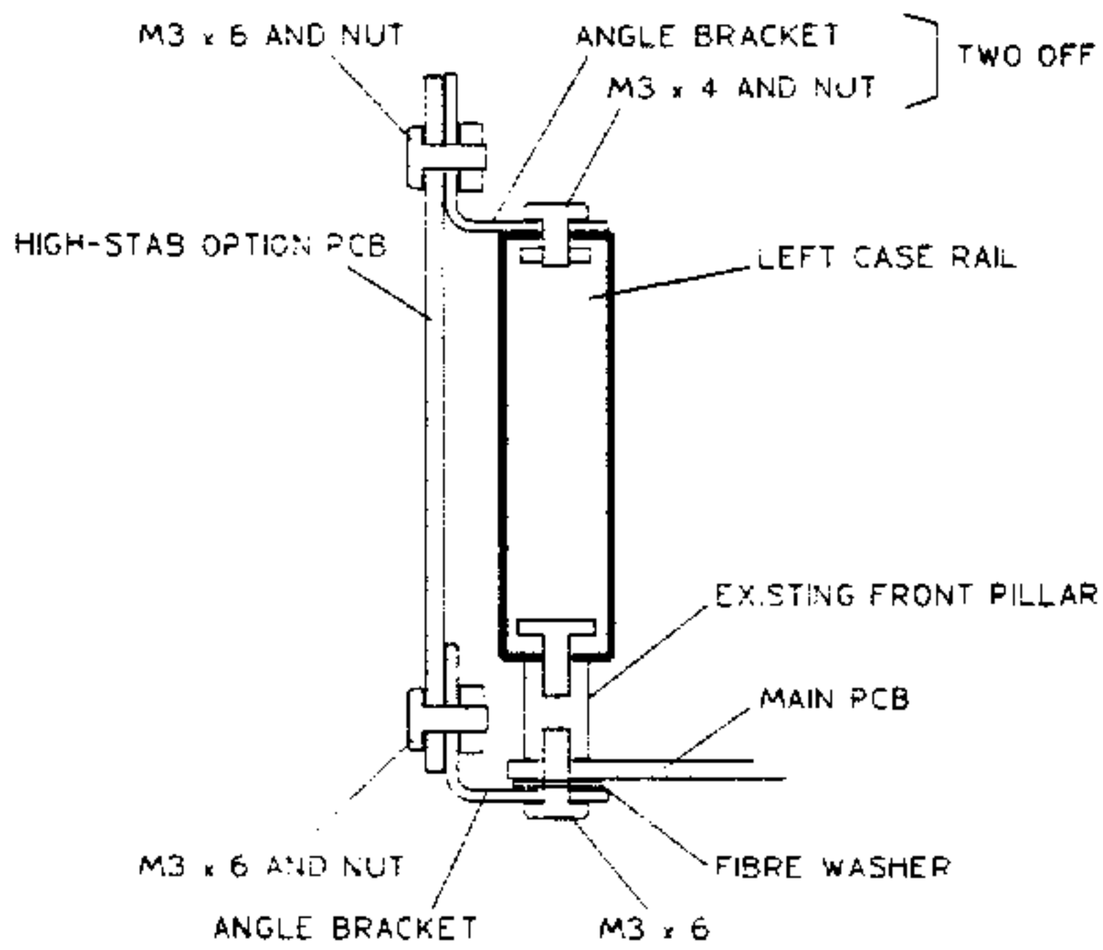

Remote control option.

The remote control option consists of three circuit boards, two mounted in the right-hand rear corner of the receiver and the third replacing the board soldered onto the back of the mode switch and S-Meter. An extension of the cable between the main unit and the connection unit provides power to the option boards, and a further cable system connects to the control unit and (new) mode unit.

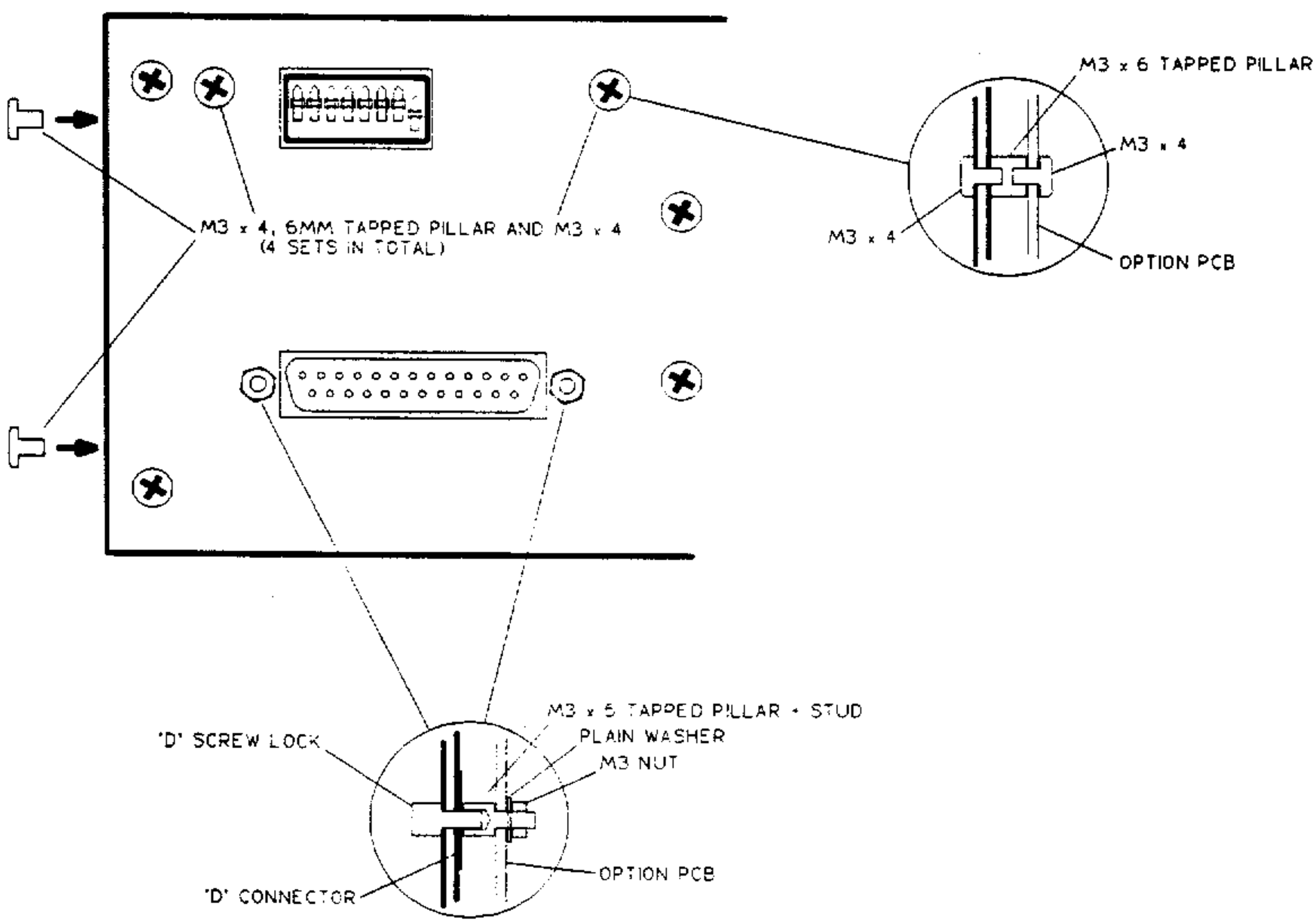

Parts list.

Main Unit

Component	Type / Value	Part No.
B 1	3V Lithium cell 300mAh	B21-0020
C 1	Ceramic plate N150 100pF 100V	C02-1010
C 2	Ceramic plate N750 180pF 100V	C03-1810
C 3	Ceramic plate N750 220pF 100V	C03-2210
C 4	Ceramic plate medium K 1.5nF 100V	C11-1520
C 5	Ceramic plate medium K 3.3nF 100V	C11-3320
C 6	Multilayer Ceramic Z5U 100nF 50V	C23-1040
C 7	Ceramic plate N750 180pF 100V	C03-1810
C 8	Ceramic plate N750 270pF 100V	C03-2710
C 9	Ceramic plate N150 100pF 100V	C02-1010
C 10	Ceramic plate N750 330pF 100V	C03-3310
C 11	Ceramic plate N150 100pF 100V	C02-1010
C 12	Ceramic plate N750 270pF 100V	C03-2710
C 13	Ceramic plate N750 330pF 100V	C03-3310
C 14	Ceramic plate N150 33pF 100V	C02-3300
C 15	Ceramic plate medium K 470pF 100V	C11-4710
C 16	Ceramic plate N750 220pF 100V	C03-2210
C 17	Ceramic plate medium K 560pF 100V	C11-5610
C 18	Ceramic plate medium K 470pF 100V	C11-4710
C 19	Ceramic plate medium K 560pF 100V	C11-5610
C 20	Ceramic plate medium K 390pF 100V	C11-3910
C 21	Ceramic plate medium K 1.5nF 100V	C11-1520
C 22	Ceramic plate medium K 1.2nF 100V	C11-1220
C 23	Ceramic plate medium K 1.5nF 100V	C11-1520
C 24	Ceramic plate medium K 820pF 100V	C11-8210
C 25,26	Ceramic plate medium K 2.2nF 100V	C11-2220
C 27-29	Ceramic plate medium K 4.7nF 100V	C11-4720
C 30	Multilayer Ceramic Z5U 100nF 50V	C23-1040
C 31	Ceramic plate medium K 4.7nF 100V	C11-4720
C 32-39	Multilayer Ceramic Z5U 100nF 50V	C23-1040
C 40	Ceramic plate high K 22nF 63V	C21-2230
C 41	Ceramic plate NP0 10pF 100V	C01-1000
C 42	Ceramic plate NP0 4.7pF 100V	C01-4790
C 43	Ceramic plate N150 27pF 100V	C02-2700
C 44,45	Ceramic plate high K 22nF 63V	C21-2230
C 46	Ceramic plate N150 100pF 100V	C02-1010
C 47-49	Ceramic plate high K 22nF 63V	C21-2230
C 50	Radial electrolytic 10uF 35V	E04-1000
C 51	Ceramic plate NP0 15pF 100V	C01-1500
C 52,53	Ceramic plate high K 22nF 63V	C21-2230
C 54,55	Ceramic plate medium K 1nF 100V	C11-1020
C 56,57	Ceramic plate high K 22nF 63V	C21-2230
C 58	Ceramic plate high K 10nF 63V	C21-1030
C 59	Ceramic plate N150 100pF 100V	C02-1010
C 60-62	Multilayer Ceramic Z5U 100nF 50V	C23-1040
C 63,64	Ceramic plate N750 220pF 100V	C03-2210
C 65,66	Multilayer Ceramic Z5U 100nF 50V	C23-1040
C 67	Ceramic plate N150 100pF 100V	C02-1010
C 68	Ceramic plate N750 220pF 100V	C03-2210
C 69,70	Ceramic plate high K 10nF 63V	C21-1030
C 71-73	Multilayer Ceramic Z5U 100nF 50V	C23-1040
C 74	Ceramic plate N150 150pF 100V	C02-1510
C 75	Ceramic plate high K 10nF 63V	C21-1030
C 76	Ceramic plate N150 100pF 100V	C02-1010
C 77,78	Ceramic plate high K 10nF 63V	C21-1030
C 79	Radial electrolytic 10uF 35V	E04-1000
C 80	Ceramic plate high K 22nF 63V	C21-2230
C 81	Box polyester 100nF 63V	C31-1041
C 82	Radial electrolytic 10uF 35V	E04-1000
C 83	Ceramic plate medium K 2.2nF 100V	C11-2220
C 84	Box polyester 22nF 100V	C31-2232
C 85	Radial electrolytic 10uF 35V	E04-1000
C 86	Radial electrolytic 100uF 10V	E01-1010
C 87	Radial electrolytic 470uF 16V	E02-4713
C 88	Radial electrolytic 220uF 10V	E01-2212
C 89	Ceramic plate high K 22nF 63V	C21-2230
C 90	Radial electrolytic 10uF 35V	E04-1000
C 91	Ceramic plate N150 33pF 100V	C02-3300
C 92	Ceramic plate NP0 10pF 100V	C01-1000
C 93	Ceramic plate N750 220pF 100V	C03-2210
C 94-98	Ceramic plate high K 22nF 63V	C21-2230
C 99	Ceramic plate NP0 15pF 100V	C01-1500
C 100	Ceramic plate NP0 6.8pF 100V	C01-6890
C 101,102	Ceramic plate high K 22nF 63V	C21-2230
C 103	Ceramic plate N150 33pF 100V	C02-3300
C 104	Multilayer Ceramic Z5U 100nF 50V	C23-1040
C 105	Ceramic plate high K 22nF 63V	C21-2230
C 106	Radial electrolytic 10uF 35V	E04-1000
C 107	Radial electrolytic 47uF 25V	E03-4701
C 108-110	Ceramic plate high K 22nF 63V	C21-2230
C 111	Ceramic plate N150 22pF 100V	C02-2200
C 112	Ceramic plate N150 47pF 100V	C02-4700
C 113,114	Ceramic plate NP0 2.2pF 100V	C01-2290
C 115	Radial electrolytic 1uF 63V	E06-1090
C 116	Box polyester 2.2uF 63V	C31-2255
C 117,118	Multilayer Ceramic Z5U 100nF 50V	C23-1040
C 119	Ceramic plate N150 100pF 100V	C02-1010
C 120	Radial electrolytic 2.2uF 63V	E06-2290
C 121-124	Ceramic plate high K 22nF 63V	C21-2230
C 125	Radial electrolytic 10uF 35V	E04-1000
C 126	Ceramic plate medium K 1nF 100V	C11-1020
C 127	Ceramic plate high K 22nF 63V	C21-2230
C 128	Radial electrolytic 1uF 63V	E06-1090
C 129	Radial electrolytic 2.2uF 63V	E06-2290
C 130	Multilayer Ceramic Z5U 100nF 50V	C23-1040
C 131-133	Ceramic plate N150 100pF 100V	C02-1010
C 134	Radial electrolytic 10uF 35V	E04-1000
C 135	Box polyester 100nF 63V	C31-1041
C 136	Box polyester 33nF 100V	C31-3332
C 137	Ceramic plate high K 10nF 63V	C21-1030
C 138	Box polyester 10nF 100V	C31-1032
C 139	Radial electrolytic 10uF 35V	E04-1000
C 142,143	Radial electrolytic 2.2uF 63V	E06-2290
C 144	Multilayer Ceramic Z5U 100nF 50V	C23-1040
C 145	Radial electrolytic 47uF 25V	E03-4701
C 146	Radial electrolytic 10uF 35V	E04-1000
C 147	Box polyester 100nF 63V	C31-1041
C 148	Radial electrolytic 470uF 16V	E02-4713
C 149	Ceramic plate high K 22nF 63V	C21-2230
C 150	Box polyester 100nF 63V	C31-1041
C 151	Ceramic plate high K 22nF 63V	C21-2230
C 152	Box polyester 220nF 63V	C31-2241
C 153	Ceramic plate high K 10nF 63V	C21-1030
C 155	Radial electrolytic 470uF 16V	E02-4713
C 156,157	Radial electrolytic 100uF 10V	E01-1010
C 158-161	Box polyester 220nF 63V	C31-2241
C 162	Radial electrolytic 470uF 16V	E02-4713
C 163,164	Box polyester 22nF 100V	C31-2232
C 165	Ceramic plate N150 150pF 100V	C02-1510
C 166	Box polyester 22nF 100V	C31-2232
D 1-11	PIN switching diode BA244A	D02-0244
D 12,13	Signal diode 1N4148	D01-4148
D 15	PIN attenuator diode MI204	D31-0204
D 16-28	Signal diode 1N4148	D01-4148
D 29,30	Varicap diode BB329	D03-0329
D 31-33	PIN switching diode BA244A	D02-0244
D 34-42	Signal diode 1N4148	D01-4148
D 46-49	High speed diode BAW62	D02-0062
J 5	PCB jack socket, 6.5mm stereo	J11-0602
J 10	6-way 0.1" r/a wafer, non locking	N03-0061
J 11	10-way 0.1" r/a wafer, non locking	N03-0101
J 14	2-way 0.1" wafer, locking	N04-0020
J 15	9-way 0.1" wafer, locking	N04-0090
L 1,2	Ferrite axial inductor 0.47uH	L01-4782
L 3	Ferrite axial inductor 3.3uH	L01-3392
L 4	Ferrite axial inductor 100uH	L01-1012
L 5,6	Ferrite axial inductor 0.22uH	L01-2282
L 7	Ferrite axial inductor 0.15uH	L01-1582
L 8	Ferrite axial inductor 0.22uH	L01-2282

L 9-12	Ferrite axial inductor 0.47uH	L01-4782
L 13-16	Ferrite axial inductor 1.5uH	L01-1592
L 17-20	Ferrite axial inductor 3.3uH	L01-3392
L 21,22	Ferrite axial inductor 15uH	L01-1502
L 23	Ferrite axial inductor 10uH	L01-1002
L 24	Ferrite axial inductor 100uH	L01-1012
L 25	Ferrite axial inductor 47uH	L01-4702
L 26	Ferrite axial inductor 33uH	L01-3302
L 27,28	Ferrite axial inductor 470uH	L01-4713
L 29-33	Ferrite axial inductor 1mH	L01-1023
L 34	Ferrite axial inductor 100uH	L01-1012
L 35-37	Ferrite axial inductor 1mH	L01-1023
L 38	Ferrite axial inductor 3.3uH	L01-3392
L 39,40	Ferrite axial inductor 1mH	L01-1023
L 41	Ferrite axial inductor 47uH	L01-4702
L 42	Ferrite axial inductor 1uH	L01-1092
L 43,44	Ferrite axial inductor 1mH	L01-1023
L 45-47	Ferrite axial inductor 100uH	L01-1012
L 48	Ferrite radial H/C inductor 470uH	L02-4711
L 49	Ferrite axial inductor 1mH	L01-1023
Q 1,2	High level mixer SL6440CDP	U12-6440
Q 3	IF amp & detector SL6700CDP	U12-6700
Q 4	NPN RF transistor ZTX320	Q16-0320
Q 5-12	NPN transistor BC183L	Q01-1831
Q 13,14	Shift & store register 74HC4094	Z06-4094
Q 15	Seven darlington drivers ULN2003	U41-2003
Q 16,17	NPN RF transistor ZTX320	Q16-0320
Q 18,19	N channel junction FET J310	Q14-0310
Q 20	PNP transistor BC212L	Q01-2121
Q 21-23	NPN transistor BC183L	Q01-1831
Q 24	Quad op-amp MC3403P	U13-3403
Q 25	Dual BiFET op-amp TL062CP	U42-0062
Q 26	Audio amplifier TDA1904	U43-1904
Q 27	Quad analogue switch 74HC4066	Z06-4066
Q 28	Dual modulus prescaler uPB553AC	Z31-0553
Q 29	PLL synthesizer system TDD1742T	U44-1742
Q 30,31	Shift & store register 74HC4094	Z06-4094
Q 32	Voltage regulator, 8V LM2930T-8	U24-0080
Q 33	Voltage regulator, 5V LM78M05CT	U22-0050
R 1	Carbon film 1/3W 5% 56R	R03-5600
R 2	Carbon film 1/3W 5% 270R	R03-2710
R 3	Carbon film 1/3W 5% 56R	R03-5600
R 4	Carbon film 1/3W 5% 10k	R03-1030
R 5-11	Carbon film 1/3W 5% 100R	R03-1010
R 12,13	Carbon film 1/3W 5% 10k	R03-1030
R 14	Carbon film 1/3W 5% 100R	R03-1010
R 15,16	Carbon film 1/3W 5% 1.5k	R03-1520
R 17	Carbon film 1/3W 5% 270R	R03-2710
R 18	Carbon film 1/3W 5% 56R	R03-5600
R 19	Carbon film 1/3W 5% 330R	R03-3310
R 20	Carbon film 1/3W 5% 10k	R03-1030
R 21	Carbon film 1/3W 5% 47k	R03-4730
R 22,23	Carbon film 1/3W 5% 220R	R03-2210
R 24	Carbon film 1/3W 5% 470R	R03-4710
R 25	Carbon film 1/3W 5% 2.7k	R03-2720
R 26	Carbon film 1/3W 5% 1.5k	R03-1520
R 27	Carbon film 1/3W 5% 220k	R03-2240
R 28	Carbon film 1/3W 5% 3.9k	R03-3920
R 29	Carbon film 1/3W 5% 1k	R03-1020
R 30	Carbon film 1/3W 5% 100R	R03-1010
R 31	Carbon film 1/3W 5% 1.5k	R03-1520
R 32	Carbon film 1/3W 5% 100R	R03-1010
R 33	Carbon film 1/3W 5% 220R	R03-2210
R 34	Carbon film 1/3W 5% 270R	R03-2710
R 35-37	Carbon film 1/3W 5% 100R	R03-1010
R 38,39	Carbon film 1/3W 5% 3.9k	R03-3920
R 40	Carbon film 1/3W 5% 1.5k	R03-1520
R 41	Carbon film 1/3W 5% 100R	R03-1010
R 42	Carbon film 1/3W 5% 330R	R03-3310
R 43	Carbon film 1/3W 5% 100R	R03-1010
R 44	Carbon film 1/3W 5% 560R	R03-5610
R 45	Carbon film 1/3W 5% 100R	R03-1010
R 46	Carbon film 1/3W 5% 3.9k	R03-3920
R 47	Carbon film 1/3W 5% 1.5k	R03-1520
R 48	Carbon film 1/3W 5% 1M	R03-1050
R 49	Carbon film 1/3W 5% 1.5k	R03-1520
R 50	Carbon film 1/3W 5% 4.7k	R03-4720
R 51	Carbon film 1/3W 5% 470R	R03-4710
R 52,53	Carbon film 1/3W 5% 10k	R03-1030
R 54	Carbon film 1/3W 5% 15k	R03-1530
R 55	Carbon film 1/3W 5% 1k	R03-1020
R 56	Carbon film 1/3W 5% 56R	R03-5600
R 57	Carbon film 1/3W 5% 220R	R03-2210
R 58	Carbon film 1/3W 5% 22k	R03-2230
R 59	Carbon film 1/3W 5% 220k	R03-2240
R 60	Carbon film 1/3W 5% 330k	R03-3340
R 61	Carbon film 1/3W 5% 47k	R03-4730
R 62,63	Carbon film 1/3W 5% 22k	R03-2230
R 64-66	Carbon film 1/3W 5% 560R	R03-5610
R 67	Carbon film 1/3W 5% 1k	R03-1020
R 68	Carbon film 1/3W 5% 220R	R03-2210
R 69	Carbon film 1/3W 5% 100k	R03-1040
R 70	Carbon film 1/3W 5% 22k	R03-2230
R 71	Carbon film 1/3W 5% 560R	R03-5610
R 72	Carbon film 1/3W 5% 100R	R03-1010
R 73	Carbon film 1/3W 5% 68k	R03-6830
R 74	Carbon film 1/3W 5% 100R	R03-1010
R 75	Carbon film 1/3W 5% 470R	R03-4710
R 77	Carbon film 1/3W 5% 47k	R03-4730
R 78	Carbon film 1/3W 5% 150k	R03-1540
R 79	Carbon film 1/3W 5% 1M	R03-1050
R 80,81	Carbon film 1/3W 5% 1.5k	R03-1520
R 82	Carbon film 1/3W 5% 6k8	R03-6820
R 83	Carbon film 1/3W 5% 47k	R03-4730
R 84	Carbon film 1/3W 5% 100k	R03-1040
R 85	Carbon film 1/3W 5% 470k	R03-4740
R 86	Carbon film 1/3W 5% 240k	R03-2440
R 87	Carbon film 1/3W 5% 120k	R03-1240
R 88	Metal film 1/4W 1% 60.4k	R12-6030
R 89	Metal film 1/4W 1% 30.0k	R12-3030
R 90	Metal film 1/4W 1% 15.0k	R12-1530
R 91	Metal film 1/4W 1% 7.50k	R12-7520
R 92	Metal film 1/4W 1% 3.30k	R12-3320
R 93	Metal film 1/4W 1% 13.0k	R12-1330
R 94	Metal film 1/4W 1% 15.0k	R12-1530
R 95	Carbon film 1/3W 5% 330R	R03-3310
R 96	Carbon film 1/3W 5% 2.7k	R03-2720
R 97	Carbon film 1/3W 5% 6k8	R03-6820
R 98	Carbon film 1/3W 5% 4.7M	R03-4750
R 99	Carbon film 1/3W 5% 100k	R03-1040
R 100,101	Carbon film 1/3W 5% 220k	R03-2240
R 102	Carbon film 1/3W 5% 68k	R03-6830
R 103,104	Carbon film 1/3W 5% 100k	R03-1040
R 105	Carbon film 1/3W 5% 2.2M	R03-2250
R 106	Carbon film 1/3W 5% 220k	R03-2240
R 107	Carbon film 1/3W 5% 100k	R03-1040
R 108	Carbon film 1/3W 5% 2.7k	R03-2720
R 109	Carbon film 1/3W 5% 22k	R03-2230
R 110	Carbon film 1/3W 5% 47k	R03-4730
R 111	Carbon film 1/3W 5% 22k	R03-2230
R 112	Carbon film 1/3W 5% 150k	R03-1540
R 113	Carbon film 1/3W 5% 470k	R03-4740
R 114	Carbon film 1/3W 5% 2.7k	R03-2720
R 115,116	Carbon film 1/3W 5% 470R	R03-4710
R 117,118	Carbon film 1/3W 5% 47k	R03-4730
R 119	Carbon film 1/3W 5% 150k	R03-1540
R 120	Carbon film 1/3W 5% 100k	R03-1040
R 121	Carbon film 1/3W 5% 47k	R03-4730
R 122	Carbon film 1/3W 5% 220k	R03-2240
R 123	Carbon film 1/3W 5% 47k	R03-4730
R 124	Carbon film 1/3W 5% 470R	R03-4710
R 127	Carbon film 1/3W 5% 10k	R03-1030
R 128	Carbon film 1/3W 5% 100R	R03-1010
R 129	Carbon film 1/3W 5% 3.3R	R03-3390
R 131,132	Carbon film 1/3W 5% 220R	R03-2210
R 133,134	Carbon film 1/3W 5% 22k	R03-2230
R 135	Carbon film 1/3W 5% 68k	R03-6830
R 136	Carbon film 1/3W 5% 2.7k	R03-2720

R 137	Carbon film 1/3W 5% 10k	R03-1030
R 138	Carbon film 1/3W 5% 22k	R03-2230
RP 1	SIL resistor pack 7 x 100k	R27-1040
RL 1,2	SIL reed relay (1A) 5V, 500R coil	T21-0510
T 2	RF transformer 4 : 14 turns	L21-0010
T 3	RF toroidal coil 5 + 5 turns	L21-0020
T 4	RF toroidal coil 3+6+2+2+2 turns	L21-0040
TC 1	Film trimmer cap 2 to 22pF	C42-5590
TC 3	Film trimmer cap 1 to 5.5pF	C42-2200
TC 4	Film trimmer cap 2 to 10pF	C42-1000
VR 1	Sub-min horizontal preset 10k	G11-1030
VR 2	Sub-min horizontal preset 470k	G11-4710
VR 3	16mm pot + DPDT switch 20kA (log)	G04-2030
VR 4	16mm pot + DPST switch 10kB (lin)	G05-1040
X 1	45 MHz crystal filter 15 kHz b/w (pair)	X11-4500
X 2	455 kHz filter 2.2 kHz b/w CFJ455K14	X24-2290
X 3	455 kHz filter 6 kHz b/w CFW455HT	X23-6090
X 4,6	455 kHz filter 4 kHz b/w CFW455IT	X23-4090
X 5	455 kHz filter 10 kHz b/w CFU455G2	X22-1000
X 7	Quartz crystal 14.8483 MHz	X01-1430
	Local oscillator screening box	H13-0010
	Input filter screening box	H13-0020

Control Unit

C 201	Ceramic plate high K 22nF 63V	C21-2230
C 202	Box polyester 220nF 63V	C31-2241
C 203	Axial electrolytic 4.7uF 63V	E16-4790
C 204	Multilayer Ceramic Z5U 100nF 50V	C23-1040
C 205,206	Ceramic plate N150 22pF 100V	C02-2200
C 207,208	Multilayer Ceramic Z5U 100nF 50V	C23-1040
C 209,210	Box polyester 22nF 100V	C31-2232
C 211,212	Ceramic plate high K 22nF 63V	C21-2230
C 213	Multilayer Ceramic Z5U 100nF 50V	C23-1040
C 214	Ceramic plate N750 220pF 100V	C03-2210
C 215	Box polyester 22nF 100V	C31-2232
D 201-205	Signal diode 1N4148	D01-4148
D 206	3mm LED, HE green MV5474C	O05-5474
D 207,208	5mm LED, HE green MV5452	O15-5452
D 209	Zener diode BZX79C4V3	D21-4390
J 201	9-way 0.1" x 0.5" board spacer	N02-0090
J 202,203	25-way SIL socket for LCD	N12-0250
J 205	2-way 0.1" wafer, locking	N04-0020
J 206	6-way 0.1" r/a wafer, non locking	N03-0061
LCD 201	6 digit x 12.5mm LCD	O21-1261
M 201	Miniature signal level meter and scale	T01-0010 H02-0421
Q 201,202	PNP transistor BC212L	Q01-2121
Q 203	NPN transistor BC183L	Q01-1831
Q 204	256 x 4bit CMOS memory 5101	Z21-5101
Q 205	Microcontroller P8749H (RED code)	Z22-8749
Q 206	LCD driver MM5453N	Z23-5453
Q 207	Quad XOR gate CD4070	Z11-0070
Q 208	Dual D-type latch 74HC74	Z06-0074
Q 209	Programmable divider MC14569BCP	Z12-0069
R 201	Carbon film 1/3W 5% 10k	R03-1030
R 202	Carbon film 1/3W 5% 56k	R03-5630
R 203	Carbon film 1/3W 5% 22k	R03-2230
R 204	Carbon film 1W 5% 82R	R05-8200
R 205	Carbon film 1/3W 5% 68k	R03-6830
R 206	Carbon film 1/3W 5% 220k	R03-2240
R 207	Carbon film 1/3W 5% 1k	R03-1020
R 208-210	Carbon film 1/3W 5% 22k	R03-2230
R 211	Carbon film 1/3W 5% 15k	R03-1530
R 212,213	Carbon film 1/3W 5% 1M	R03-1050
R 214,215	Carbon film 1/3W 5% 150k	R03-1540
R 216-219	Carbon film 1/3W 5% 68k	R03-6830
R 220	Carbon film 1/3W 5% 68R	R03-6800
R 221,222	Carbon film 1/3W 5% 47R	R03-4700
R 223	Carbon film 1/3W 5% 2.7k	R03-2720
R 224	Carbon film 1/3W 5% 22k	R03-2230
R 225	Carbon film 1/3W 5% 1M	R03-1050
R 226	Carbon film 1/3W 5% 1k	R03-1020
S 201	Mechanical encoder 2 phase, 50 pulse	S31-5020
S 202	Rotary switch 2-pole 6-way	S12-0620
TC 201	Film trimmer cap 2 to 10pF	C42-1000
X 201	Quartz crystal 10.080 MHz	X01-1031
	Display light guide	H12-0400

Additional parts for FAX option

R 227-229	Carbon film 1/3W 5% 10k	R03-1030
Q 210	NPN transistor BC183L	Q01-1831

IF Gain Unit

D 301	Signal diode 1N4148	D01-4148
J 301	5-way 0.1" r/a wafer, non locking	N03-0051
Q 301	BiFET op-amp TL061CP	U42-0061
R 301	Carbon film 1/3W 5% 22k	R03-2230
R 302	Carbon film 1/3W 5% 10k	R03-1030
R 303	Carbon film 1/3W 5% 1M	R03-1050
R 304	Carbon film 1/3W 5% 47k	R03-4730
VR 301	Sub-min horizontal preset 10k	G11-1030

Keypad Unit

C 401	Box polyester 33nF 100V	C31-3332
C 402	Radial electrolytic 4.7uF 63V	E06-4790
C 403	Radial electrolytic 100uF 10V	E01-1011
J 401	2-way 0.1" wafer, locking	N04-0020
J 402	7-way 0.1" wafer, non locking	N01-0070
J 403,404	2-way IDC free socket	J22-0020
Q 401	Keypad PPM generator SL490BDP	U12-0490
Q 402	Voltage regulator, 8V UA78L08CLP	U23-0080
Q 403,404	NPN transistor BC183L	Q01-1831
R 401	Metal film 1/4W 1% 68.0k	R12-6830
R 402	Carbon film 1/3W 5% 2.2k	R03-2220
R 403	Carbon film 1/3W 5% 100k	R03-1040
R 404	Carbon film 1/3W 5% 22k	R03-2230
R 405	Carbon film 1/3W 5% 150R	R03-1510

Connection Unit and Power supply

C 501	Ceramic plate N150 68pF 100V	C02-6800
C 502	Box polyester 22nF 100V	C31-2232
C 503	Ceramic plate medium K 1nF 100V	C11-1020
C 504	Multilayer Ceramic Z5U 100nF 50V	C23-1040
C 505	Radial electrolytic 2.2uF 63V	E06-2290
C 506	Radial electrolytic 10uF 35V	E04-1000
C 507	Multilayer Ceramic Z5U 100nF 50V	C23-1040
C 508	Radial electrolytic 100uF 10V	E01-1011
C 509	Radial electrolytic 10uF 35V	E04-1000
C 510	Radial electrolytic 2.2uF 63V	E06-2290
C 511	Radial electrolytic 10uF 35V	E04-1000
C 512	Radial electrolytic 220uF 63V	E06-2213
C 513	Radial electrolytic 100uF 10V	E01-1011
C 514	Radial electrolytic 1000uF 25V	E03-1023
C 515	Box polyester 22nF 100V	C31-2232
C 516	Radial electrolytic 2200uF 25V	E03-2224
D 501-505	High speed diode BAW62	D02-0062

D 506-509	Signal diode 1N4148	D01-4148
D 510	Zener diode BZX79C2V7	D21-2790
D 511	Zener diode BZX79C6V2	D21-6290
D 512	Zener diode BZX79C9V1	D21-9190
D 513-516	Rectifier diode 1N4002	D01-4002
F 501	5 x 20mm Fuse 1A T	T40-1021
F 502	5 x 20mm Fuse 250mA T (for 240V)	T40-2511
	5 x 20mm Fuse 500mA T (for 110V)	T40-5011
	Fuse holder clip (for F501)	N20-5200
J 501	BNC antenna socket, PCB mounting	J01-0012
	Antenna circuit screening box	H13-0020
J 502	2-way 0.1" wafer, locking	N04-0020
J 503	25-way D plug, PCB mounting	J30-0252
J 504,508	4-way 0.1" wafer, locking	N04-0040
J 505	9-way 0.1" wafer, locking	N04-0090
J 506	IEC mains inlet/fuse/filter/volt select	J50-3000
	4.8mm crimp receptacle	J28-0400
J 507	4-way crimp free socket	J23-0040
J 509	4-way IDC free socket	J22-0040
J 510,511	9-way IDC free socket	J22-0090
J 512,513	2-way crimp free socket	J23-0020
L 501,502	Ferrite axial inductor 0.15uH	L01-1582
Q 501	Dual op-amp LM358N	U11-0358
Q 502	NPN transistor BC183L	Q01-1831
Q 503	Dual BiFET op-amp TL062CP	U42-0062
Q 504	PNP power transistor TIP32C	Q17-0323
Q 505	NPN high voltage transistor MPSA43	Q19-0043
R 501-504	Carbon film 1W 5% 100R	R05-1010
R 505	Carbon film 1/3W 5% 2.2k	R03-2220
R 506	Carbon film 1/3W 5% 100k	R03-1040
R 507	Carbon film 1/3W 5% 150k	R03-1540
R 508	Carbon film 1/3W 5% 2.2k	R03-2220
R 509-512	Carbon film 1/3W 5% 10k	R03-1030
R 513,514	Carbon film 1/3W 5% 4.7k	R03-4720
R 515	Carbon film 1/3W 5% 2.2k	R03-2220
R 516,517	Carbon film 1/3W 5% 100k	R03-1040
R 518	Carbon film 1/3W 5% 47k	R03-4730
R 519	Carbon film 1/3W 5% 470k	R03-4740
R 520	Carbon film 1/3W 5% 33k	R03-3330
R 521	Carbon film 1/3W 5% 300k	R03-3040
R 522,523	Carbon film 1/3W 5% 300R	R03-3010
R 524	Carbon film 1/3W 5% 4.7k	R03-4720
R 525	Carbon film 1/3W 5% 1k	R03-1020
R 526,527	Carbon film 1/3W 5% 300R	R03-3010
R 528	Carbon film 1/3W 5% 4.7k	R03-4720
RL 501	SIL reed relay (1A) 5V, 500R coil	T21-0510
T 501	RF transformer 5 : 5 turns	L21-0060
T 502	600 ohm line transformer 1+1:2+2	T32-6000
T 503	30VA 15+15V toroidal mains xfmr	T31-3015
VR 501	Horizontal preset 22k	G13-2230
VR 502	Horizontal preset 100k	G13-1040
	19mm Clip-in spindle	K21-6196

High-stability Option

C 601-603	Ceramic plate medium K 1nF 100V	C11-1020
C 604,605	Ceramic plate high K 22nF 63V	C21-2230
C 606	Multilayer Ceramic Z5U 100nF 50V	C23-1040
C 607	Ceramic plate medium K 820pF 100V	C11-8210
C 608	Ceramic plate medium K 4.7nF 100V	C11-4720
C 609	Radial electrolytic 4.7uF 63V	E06-4790
C 610	Multilayer Ceramic Z5U 100nF 50V	C23-1040
C 611	Ceramic plate medium K 1nF 100V	C11-1020
C 612,613	Multilayer Ceramic Z5U 100nF 50V	C23-1040
C 614	Radial electrolytic 4.7uF 63V	E06-4790
C 615	Box polyester 1uF 63V	C31-1051
D 601,602	Signal diode 1N4148	D01-4148
J 16	7-way 0.1" wafer, locking	N04-0070
J 17	2-way 0.1" wafer, locking	N04-0020
J 207	3-way 0.1" wafer, locking	N04-0030
J 601	2-way 0.1" wafer, locking	N04-0020
J 602	3-way 0.1" wafer, locking	N04-0030
J 603	7-way 0.1" wafer, locking	N04-0070
J 604,605	2-way crimp free socket	J23-0020
J 606,607	3-way crimp free socket	J23-0030
J 608,609	7-way IDC free socket	J22-0070
JP 601	2-way 0.1" wafer, non locking	N01-0020
JP 602	0.1" shorting link	J29-0020
L 601,602	Ferrite axial inductor 1mH	L01-1023
L 603	Ferrite radial H/C inductor 470uH	L02-4711
Q 34	NPN RF transistor ZTX320	Q16-0320
Q 601	High level mixer SL6440CDP	U12-6440
Q 602	NPN transistor BC183L	Q01-1831
Q 603	Shift & store register CD4094	Z11-0094
Q 604	Hex Schmitt inverter 74HC14	Z06-0014
Q 605	Microcontroller P8749H (BLUE code)	Z22-8749
Q 606	BiFET op-amp TL061CP	U42-0061
R 601	Carbon film 1/3W 5% 1.5k	R03-1520
R 602,603	Carbon film 1/3W 5% 470R	R03-4710
R 604	Carbon film 1/3W 5% 10k	R03-1030
R 605	Carbon film 1/3W 5% 470R	R03-4710
R 606	Carbon film 1/3W 5% 2.2k	R03-2220
R 607	Carbon film 1/3W 5% 330k	R03-3340
R 608	Carbon film 1/3W 5% 2.2k	R03-2220
R 609	Carbon film 1/3W 5% 220R	R03-2210
R 610	Carbon film 1/3W 5% 390R	R03-3910
R 611	Carbon film 1/3W 5% 47k	R03-4730
R 612	Carbon film 1/3W 5% 39k	R03-3930
R 613	Carbon film 1/3W 5% 2.2k	R03-2220
R 614,615	Carbon film 1/3W 5% 47k	R03-4730
R 616,617	Carbon film 1/3W 5% 150k	R03-1540
VR 601	Multiturn preset 10k	G21-1030
X 601	10.0800MHz Temp compensated osc	X30-1032

Remote Control Option

C 701,702	Radial electrolytic 100uF 25V	E03-1012
C 703	Radial electrolytic 100uF 10V	E01-1011
C 704	Box polyester 47nF 100V	C31-4732
C 705,706	Ceramic plate N150 22pF 100V	C02-2200
C 707	Multilayer Ceramic Z5U 100nF 50V	C23-1040
C 708	Radial electrolytic 2.2uF 63V	E06-2290
C 709	Multilayer Ceramic Z5U 100nF 50V	C23-1040
C 710-712	Radial electrolytic 220uF 25V	E03-2213
C 713	Box polyester 100nF 63V	C31-1041
D 701	2.5V voltage reference REF25Z	U25-0250
D 702-715	Signal diode 1N4148	D01-4148
J 204	4-way 0.1" wafer, locking	N04-0040
J 701	6-way 0.1" wafer, locking	N04-0060
J 702	10-way 0.1" wafer, locking	N04-0100
J 703	4-way 0.1" wafer, locking	N04-0040
J 704,705	6-way 0.1" r/a wafer, non locking	N03-0061
J 706	25-way D socket, PCB mounting	J32-0252
J 707	4-way IDC free socket	J22-0040
J 708	6-way IDC free socket	J22-0060
J 709	10-way IDC free socket	J22-0100
J 710	4-way IDC free socket	J22-0040
L 701	Ferrite radial H/C inductor 470uH	L02-4711
Q 701	Shift & store register CD4094	Z11-0094
Q 702	Voltage regulator, 5V LM78M05CT	U22-0050
Q 703	Dual BiFET op-amp TL062CP	U42-0062
Q 704	NPN transistor BC183L	Q01-1831

Q 705	Microcontroller P8749H (GREEN)	Z22-8749
Q 706,707	Opto isolator 4N36	U45-0036
Q 708	Quad BiFET op-amp TL064CP	U42-0064
Q 709	Voltage regulator, 8V LM7808	U21-0080
Q 710	DC-DC convertor 12 to 15+15, SIL.	T50-1215
R 701	Carbon film 1/3W 5% 220k	R03-2240
R 702	Carbon film 1/3W 5% 100k	R03-1040
R 703	Carbon film 1/3W 5% 1.5k	R03-1520
R 704	Carbon film 1/3W 5% 1k	R03-1020
R 705	Carbon film 1/3W 5% 4.7k	R03-4720
R 706	Carbon film 1/3W 5% 1k	R03-1020
R 707-710	Carbon film 1/3W 5% 4.7k	R03-4720
R 711	Carbon film 1/3W 5% 1k	R03-1020
R 712,713	Carbon film 1/3W 5% 220k	R03-2240
R 714,715	Carbon film 1/3W 5% 3.3k	R03-3320
R 716	Carbon film 1/3W 5% 220k	R03-2240
R 717-719	Carbon film 1/3W 5% 3.3k	R03-3320
R 720	Carbon film 1/3W 5% 680R	R03-6810
R 721	Carbon film 1/3W 5% 560R	R03-5610
S 701	8 Section DIL switch	S43-0810
VR 701	Sub-min horizontal preset 470R	G11-4710
VR 702	Sub-min horizontal preset 100k	G11-1040
X 701	Quartz crystal 10.368 MHz	X01-1032

D-225 Detector Unit

C 1	Multilayer Ceramic Z5U 100nF 50V	C23-1040
C 2	Ceramic plate medium K 1nF 100V	C11-1020
C 3	Ceramic plate high K 10nF 63V	C21-1030
C 4	Multilayer Ceramic Z5U 100nF 50V	C23-1040
C 5,6	Ceramic plate high K 22nF 63V	C21-2230
C 7	Ceramic plate medium K 3.3nF 100V	C11-3320
C 8	Ceramic plate N150 150pF 100V	C02-1510
C 9	Radial electrolytic 2.2uF 63V	E06-2290
C 10	Ceramic plate high K 22nF 63V	C21-2230
C 11	Ceramic plate N150 100pF 100V	C02-1010
C 12,13	Ceramic plate N150 68pF 100V	C02-6800
C 14	Ceramic plate medium K 1nF 100V	C11-1020
C 15	Ceramic plate high K 22nF 63V	C21-2230
C 16	Radial electrolytic 100uF 10V	E01-1011
C 17	Ceramic plate medium K 820pF 100V	C11-8210
C 18	Ceramic plate medium K 470pF 100V	C11-4710
C 19	Ceramic plate N150 68pF 100V	C02-6800
C 20	Ceramic plate N150 150pF 100V	C02-1510
C 21	Multilayer Ceramic Z5U 100nF 50V	C23-1040
C 22	Radial electrolytic 2.2uF 63V	E06-2290
C 23	Radial electrolytic 47uF 10V	E01-4700
C 24	Radial electrolytic 1uF 63V	E06-1090
C 25	Multilayer Ceramic Z5U 100nF 50V	C23-1040
C 26	Ceramic plate high K 10nF 63V	C21-1030
C 27	Ceramic plate N150 150pF 100V	C02-1510
C 28	Ceramic plate medium K 3.3nF 100V	C11-3320
C 29	Box polyester 100nF 63V	C31-1041
C 30	Box polyester 220nF 63V	C31-2241
C 31,32	Ceramic plate high K 22nF 63V	C21-2230
C 33	Ceramic plate medium K 1nF 100V	C11-1020
C 34	Box polyester 100nF 63V	C31-1041
C 35,36	Multilayer Ceramic Z5U 100nF 50V	C23-1040
D 1,2	Signal diode 1N4148	D01-4148
D 3	High speed diode BAW62	D02-0062
D 4	Varicap diode BB329	D03-0329
D 5	Zener diode BZX79C5V1	D21-5190
D 6	Signal diode 1N4148	D01-4148
J 1	10-way 0.1" r/a wafer, non locking	N03-0101
L 1	Ferrite axial inductor 1mH	L01-1023
Q 1,2	NPN transistor BC183L	Q01-1831
Q 3	FM IF system MC3357P	U13-3357
Q 4	PNP transistor BC212L	Q01-2121
Q 5	High level mixer SL6440CDP	U12-6440
Q 6	Quad NOR gate CD4001	Z11-0001
Q 7,8	PNP transistor BC212L	Q01-2121
Q 9	NPN transistor BC183L	Q01-1831
Q 10	Quad analogue switch CD4066	Z11-0066
R 1	Carbon film 1/3W 5% 1.5k	R03-1520
R 2,3	Carbon film 1/3W 5% 220k	R03-2240
R 4	Carbon film 1/3W 5% 10k	R03-1030
R 5	Carbon film 1/3W 5% 2.2k	R03-2220
R 6	Carbon film 1/3W 5% 1.2k	R03-1220
R 7	Carbon film 1/3W 5% 10k	R03-1030
R 8	Carbon film 1/3W 5% 47k	R03-4730
R 9	Carbon film 1/3W 5% 1.5k	R03-1520
R 10	Carbon film 1/3W 5% 15k	R03-1530
R 11	Carbon film 1/3W 5% 330k	R03-3340
R 12,13	Carbon film 1/3W 5% 3.9k	R03-3920
R 14,15	Carbon film 1/3W 5% 15k	R03-1530
R 16	Carbon film 1/3W 5% 100k	R03-1040
R 17	Carbon film 1/3W 5% 2.7k	R03-2720
R 18	Carbon film 1/3W 5% 2.2k	R03-2220
R 19,21	Carbon film 1/3W 5% 5k6	R03-5620
R 20	Carbon film 1/3W 5% 1k	R03-1020
R 22	Carbon film 1/3W 5% 220k	R03-2240
R 23,24	Carbon film 1/3W 5% 10k	R03-1030
R 25	Carbon film 1/3W 5% 2.7k	R03-2720
R 26	Carbon film 1/3W 5% 470R	R03-4710
R 27,28	Carbon film 1/3W 5% 220R	R03-2210
R 29	Carbon film 1/3W 5% 3.9k	R03-3920
R 30	Carbon film 1/3W 5% 330k	R03-3340
R 31,32	Carbon film 1/3W 5% 47k	R03-4730
R 33,34	Carbon film 1/3W 5% 10k	R03-1030
R 35	Carbon film 1/3W 5% 15k	R03-1530
R 36	Carbon film 1/3W 5% 1M	R03-1050
R 37	Carbon film 1/3W 5% 62k	R03-6230
R 38	Carbon film 1/3W 5% 330k	R03-3340
R 39	Carbon film 1/3W 5% 100k	R03-1040
TC 1	Film trimmer cap 5 to 65pF	C42-6500
X 1	455 kHz filter 12 kHz b/w CFU455F2	X22-1200
X 2	455 kHz quad element CDB455C7	X04-4510
X 3	455 kHz resonator KBR455H (selected)	X03-4512

Case Assembly

	Case frame - top, bottom, sides	H21-2350
	Front panel assembly	H01-0510
	Rear panel	H01-0540
	Option cover plate	H01-0560
	Case rail	H12-0620
LS 1	Loudspeaker, 64mm 8 ohms	T11-0640
	15mm knob, VOLUME and TONE	K01-0150
	15mm winged knob, MODE	K02-0150
	Black arrow cap for knob	K03-1150
	43mm knob, TUNING	K11-0430
	Hexagonal pillar 6mm x M3	F12-3060
	Hexagonal pillar 10mm x M3	F12-3100
	Pillar with stud 5mm x M3	F13-3050
	D-connector lock pillar	F13-3051
	15mm angle bracket	F41-0010
	Loudspeaker fixing clip	F41-0020
	M3 x 6mm screw, hexagon head	F05-3060
	M3 x 6mm screw, countersunk, black	F02-3061
	Adhesive cable clip	F22-0062

Accessories

	2m 3-core mains lead	W30-2301
	25-way linked connector	J32-0250
	Carton	P01-2350
	Packing material	P01-2351 thru P01-2354
	Operation and Maintenance Manual	M02-2350

General Description.

Frequency coverage	30 kHz to 30 MHz continuous coverage.
Reception modes	AM, LSB, USB, CW, Narrow band FM (+), Synchronous AM (AMS) (+).
Receiver system	Microprocessor controlled PLL tuning, dual conversion superheterodyne receiver. First intermediate frequency 44.999 MHz to 45.000 MHz. Second intermediate frequency 455 kHz. R F Input tuning in six bands :- 1. below 500 kHz 2. 500 kHz to 1.7 MHz 3. 1.7 MHz to 4.2 MHz 4. 4.2 MHz to 10 MHz 5. 10 MHz to 19 MHz 6. 19 MHz to 30 MHz
Displays	5-digit backlit LCD showing receiver frequency to the nearest kilohertz. Additional indicators show memory mode and AMS detector lock. Analogue signal strength meter, calibrated S1 to S9, +10dB, +30dB and +50dB.
Tuning	By Spin-wheel, MHz band buttons and Direct keypad frequency entry. Tuning rates :- CW, SSB and AMS modes - 8 Hz steps, 1.6 kHz per revolution. AM mode - 50 Hz steps, 9 kHz per revolution. FM mode - 125 Hz steps, 25 kHz per revolution. Tuning step size increases with rapid spin-wheel rotation. Keypad frequency entry is to 100 Hz resolution.
Memories	30 frequency memories selected with tuning spin-wheel. Data held with lithium battery backup for > 5 years. Memories 1 to 10 can be selected from the keypad. Memory functions : Store, Recall, Preview and Channel. Two tunable frequency stores, A and B. Receiver frequency is retained while switched off.
I F filters	SSB and AM : Operator selectable 2.2, 4, 7 and 10 kHz. AMS : Operator selectable 2.2, 4, 7 and 12 kHz. CW : 2.2 kHz. FM : 12 kHz. (750 us audio de-emphasis).
Audio filter	200 Hz wide audio peak filter centred on 800Hz, selectable in CW mode.
R F attenuator	Operator selectable 20 dB attenuator.
Controls	Power / stby and Volume control. Manual I F Gain / AGC off control. Mode switch - CW, LSB, USB, AM, AMS, FM. Memory mode select button. RF attenuator / Memory CHANNEL button. Filter select / Memory RECALL button. MHz Down / Memory STORE button. MHz Up / Memory STORE button. Tuning / Memory select spin-wheel. Numeric keypad (0 to 9, Enter and Cancel). Line output level (on rear panel). FM squelch level (on rear panel) (+).
Aerial input	50 ohm unbalanced input via BNC socket, isolated ground.
Audio outputs	Record output at approx 200 mV (unbalanced). Balanced 600 ohm line output, adjustable level. External loudspeaker. Headphone output (mono or stereo headphones) (6.3mm jack socket). The internal loudspeaker is connected via an external link. Internal and external loudspeakers are disconnected when headphones are plugged in.
Power supply	AC mains 110-120 or 220-240 V 50 Hz. DC supply 20 to 40 V. DC supply 12 to 40 V (with slightly reduced RF performance).
Dimensions	Front panel : 483 x 88 mm (19" x 2U) Behind panel : 428 x 82 x 290 mm (WxHxD) Overall : 483 x 88 x 320 mm (WxHxD) Weight approx 5.5 kg

(+) Indicates facility available if appropriate option is fitted.

Performance.

Sensitivity

Signal levels are in micro-volts (uV) PD across the aerial input.
AM and SSB sensitivity measured with 10 dB signal/noise ratio at the receiver output.
FM sensitivity measured for 12dB SINAD.

AM signal	modulated to 70% depth at 1 kHz.
FM signal	deviated by 3 kHz at 1 kHz.
SSB signal	unmodulated, resolved at 1 kHz.

Receiver Frequency		
60 kHz to 2 MHz	AM	< 1.5 uV typically 1.0 uV
	FM	< 1.2 uV typically 0.8 uV
	SSB	< 0.7 uV typically 0.5 uV
2 MHz to 30 MHz	AM	<1.0 uV typically 0.7 uV
	FM	< 0.9 uV typically 0.6 uV
	SSB	< 0.5 uV typically 0.3 uV

Selectivity

I F Filter	Bandwidth (kHz)		(Shape factor 6:60 dB)	
2.2 kHz	2.3 at -6dB	3.4 at -60dB	5.5 at -80dB	SF 1:1.5
4 kHz	5.9 at -6dB	9.8 at -60dB	10.7 at -80dB	SF 1:1.7
7 kHz	8.8 at -6dB	12.9 at -60dB	14.6 at -80dB	SF 1:1.5
10 kHz	10.5 at -6dB	21.5 at -60dB		SF 1:2

SSB carrier point attenuation (with 2.2 kHz filter) 20 dB.
CW mode filter position relative to carrier frequency :-
-6dB points at -0.8 kHz and +1.35 kHz. Audio output 800 Hz at carrier frequency.
200 Hz audio filter centred on 800 Hz, b/w 170 Hz at -6dB, 850 Hz at -20dB.

FM Adjacent channel selectivity :-	12.5 kHz channels	40 dB (1.5 kHz devn)
	25 kHz channels	65 dB (3.0 kHz devn)

FM Signal capture ratio 9 dB

Dynamic range

Reciprocal mixing effects :- (with 2.2 kHz filter)
> 80 dB at 5 kHz from wanted signal
> 90 dB at 10 kHz from wanted signal
> 105 dB at > 100 kHz from wanted signal

Intermodulation effects :- (with 2.2 kHz filter)
At 10 kHz signal separation : 3rd order intercept point > +3 dBm
Intermodulation-free dynamic range > 85 dB
At 50 kHz signal separation : 3rd order intercept point > +12 dBm
Intermodulation-free dynamic range > 93 dB

Spurious responses

Images :-	At + 90 MHz	> 75 dB rejection
	At + 910 kHz	> 90 dB rejection
Fixed :-	At 45 MHz	> 85 dB rejection
	At 455 kHz	> 100 dB rejection
	At 22.5 MHz	> 75 dB rejection

Frequency stability

Standard model - typical specification

At constant 20 C	Drift < +/- 30 Hz in one hour
	Frequency error < +/- 50 Hz
-15 C to +50 C	Frequency error < +/- 200 Hz

High stability option :-

0 C to +50 C	Frequency erorr < 1ppm +/- 5 Hz

AGC characteristics

Input signal level	Audio output level (AM mode)	(SSB mode)	
No signal	-11 dB	-21 dB	(noise only)
0.5 uV	-2 dB	-7 dB	
5 uV	0 dB	-1 dB	
50 uV	0 dB	0 dB	(reference level)
100 mV	+0.5 dB	+2 dB	(AGC range limit)

AM mode :	Attack time	500 ms for 60 dB level change
	Release rate	30 dB per second
SSB mode :	Attack time	< 5 ms for 60 dB level change
	Release rate	40 dB per second

Noise blanker

Audio muting triggered by IF signal level. Permanently enabled, operates on all modes.
Blanking period 500 us, threshold level 12 dB above normal carrier.

Audio output

2.5 W into 8 ohms, 3.5 W into 4 ohms at 5% THD.
External LS output is suitable for loudspeakers with impedances of 4 ohms or greater.

Headphone output :	up to 4 Volts from 220 ohms.
Record output :	200 mV from 5 kohms.
Balanced line output :	0 to 2.5 V from 600 ohms (terminated).

Line output is floating with external centre-tap split.

Frequency response

SSB mode :	2.2 kHz filter	370 Hz to 2.5 kHz (-6dB)
AM mode :	2.2 kHz filter	40 Hz to 1.1 kHz (-6dB)
	4 kHz filter	40 Hz to 3.1 kHz (-6dB)
	7 kHz filter	40 Hz to 4.3 kHz (-6dB)
	10 kHz filter	40 Hz to 5.2 kHz (-6dB)

Distortion

AM mode : 1 kHz signal modulated at 70% depth.

With standard AM detector :	THD < 1%
With synchronous detector :	THD < 0.6%

SSB mode : 1kHz resolved signal THD < 0.2%
Two-signal IM products > 35 dB below wanted, with signal separation > 180 Hz.

AMS Detector

Lock range : +/- 100 Hz.
Audio distortion under carrier-fade conditions. Signal modulated to 70% wrt full carrier level.

6 dB carrier reduction :	2.8% THD	(23% with conventional AM detector).
10 dB carrier reduction :	4.0% THD	(39% with conventional AM detector).
20 dB carrier reduction :	4.1% THD	(50% with conventional AM detector).

S/N ratio

AM mode : 7 kHz filter, ref 70% modulation at 1kHz.

	Input signal	S/N	Weighted S/N (CCITT P.53A)
	5 uV	29 dB	33 dB
	> 50 uV	47 dB	52 dB
SSB mode :	5 uV	34 dB	37 dB
	> 50 uV	50 dB	54 dB

Power supply

AC supply 110-120 or 220-240 V selectable.
Typical consumption 10VA operating, 1VA standby.

DC supply 20 to 40 V (60 V maximum).
Supply is isolated from antenna and chassis.
Can operate in low-voltage mode with slightly reduced RF performance from supplies down to 12V (ie for vehicle use).
Quiescent current 250 mA (standard model, no audio output).
Typical power consumption 300 to 400 mA.

Options and Accessories.

Supplied Accessories

Mains cable.
DC power / signal plug (25-pin D-type).
Operating and maintenance manual.

Optional parts

D-225	Additional detector unit providing narrow-band FM and synchronous AM modes.
S-225	External high-quality loudspeaker, 8 ohms. (186 x 241 x 225 mm)
C-235	Desk-top case. (496 x 128 x 335 mm)
HF-235/H	Receiver including high stability option with TCXO frequency reference.
HF-235/R	Receiver including remote control option giving frequency and mode selection via an RS232 data link.
HF-235/F	Receiver with FAX mode substituted for LSB mode.

Specification subject to change without notice.

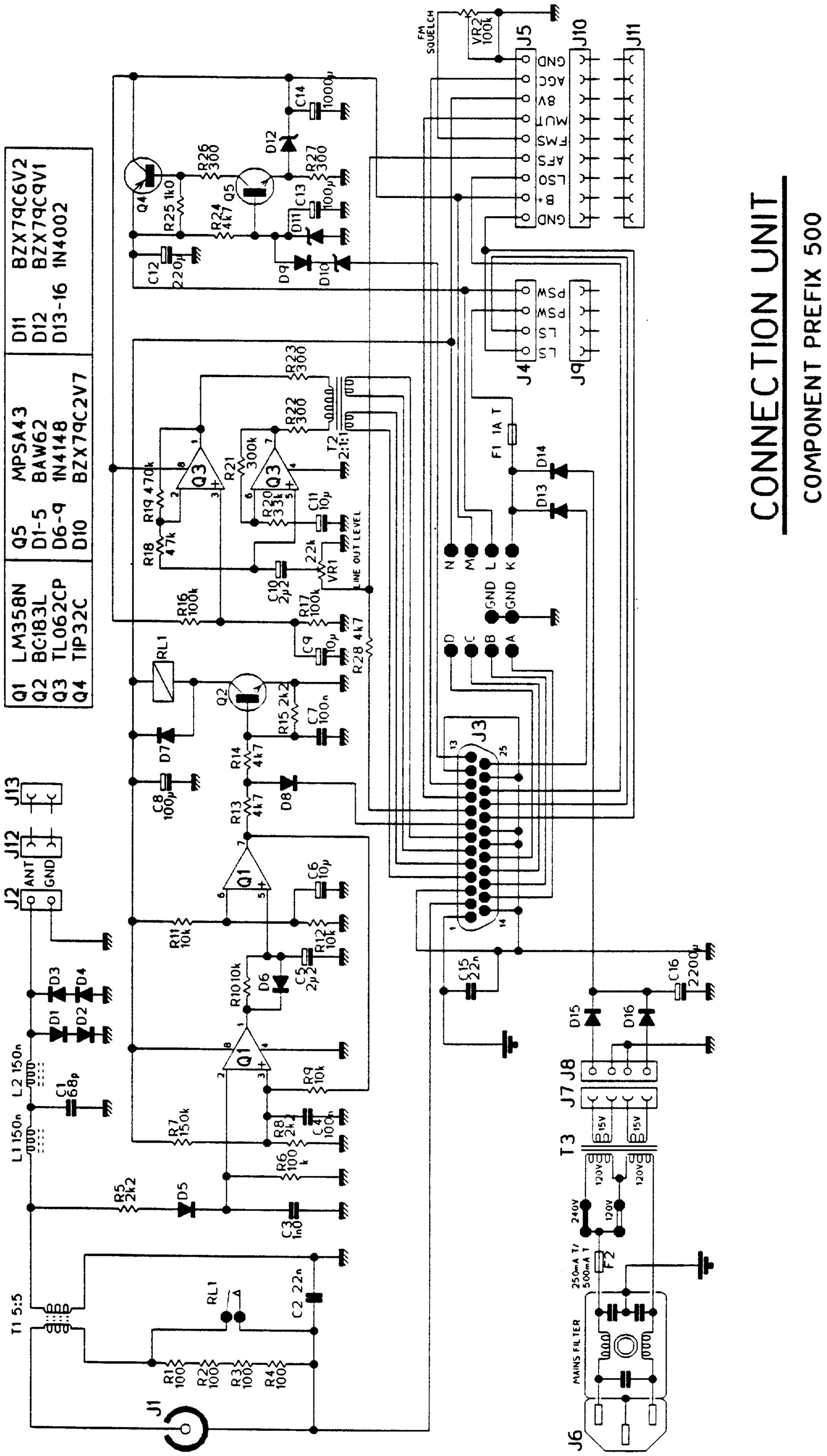
CONNECTION UNIT
COMPONENT PREFIX 500
Q1 LM358N
Q2 BC183L
Q3 TL062CP
Q4 TIP32C
Q5 MPSA43
D1-5 BAW62
D6-9 1N4148
D10 BZX79C2V7
D11 BZX79C6V2
D12 BZX79C9V1
D13-16 1N4002
FM SQUELCH
LINE OUT LEVEL
MAINS FILTER
240V
120V
250mA T/
500mA T

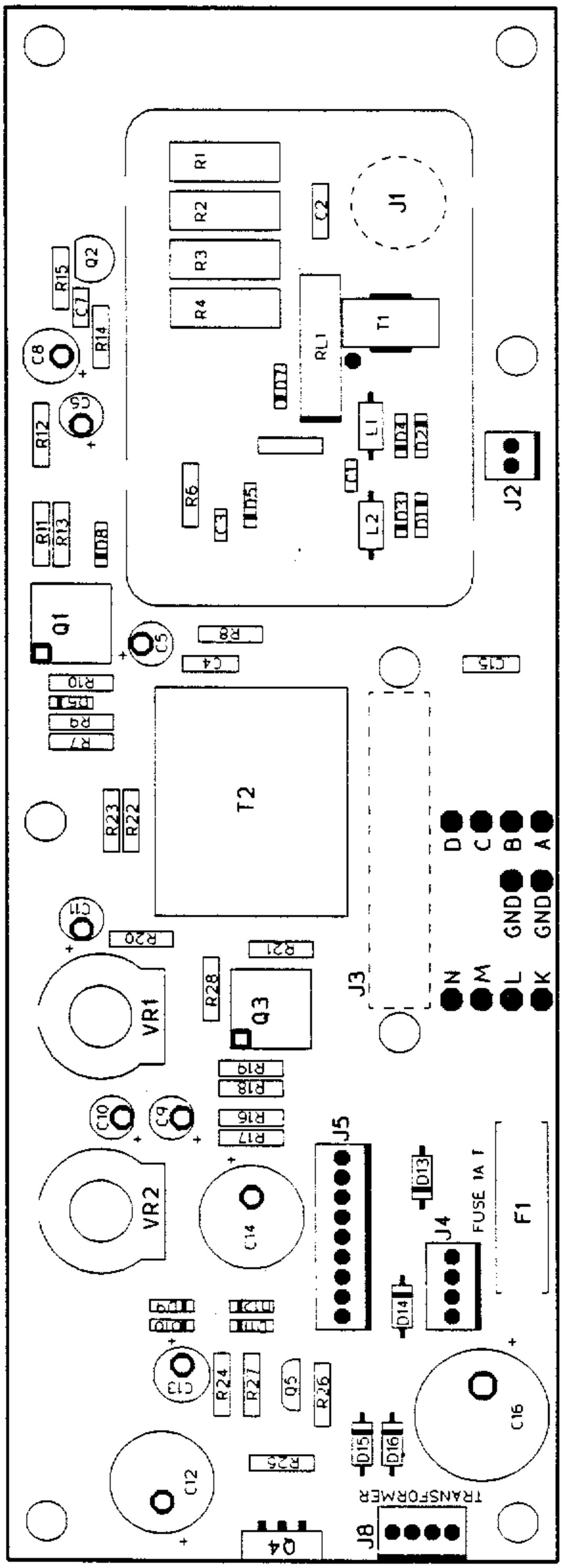
CONNECTION UNIT
R1
R2
R3
R4
C2
J1
T1
RL1
L1
L2
J2
R6
C3
D5
D7
D4
D2
D3
D1
C1
R15
Q2
C7
R14
C8
R12
C6
R11
R13
D8
Q1
C5
R9
C4
C15
R10
R5
R8
R7
T2
R23
R22
D
C
B
A
GND
GND
C11
R20
VR1
R28
Q3
R21
J3
N
M
L
K
R19
R18
R16
R17
C10
C9
VR2
C14
J5
D13
J4
FUSE 1A T
F1
D14
R24
R27
Q5
R26
C13
C16
D15
D16
R25
C12
TRANSFORMER
J8
Q4

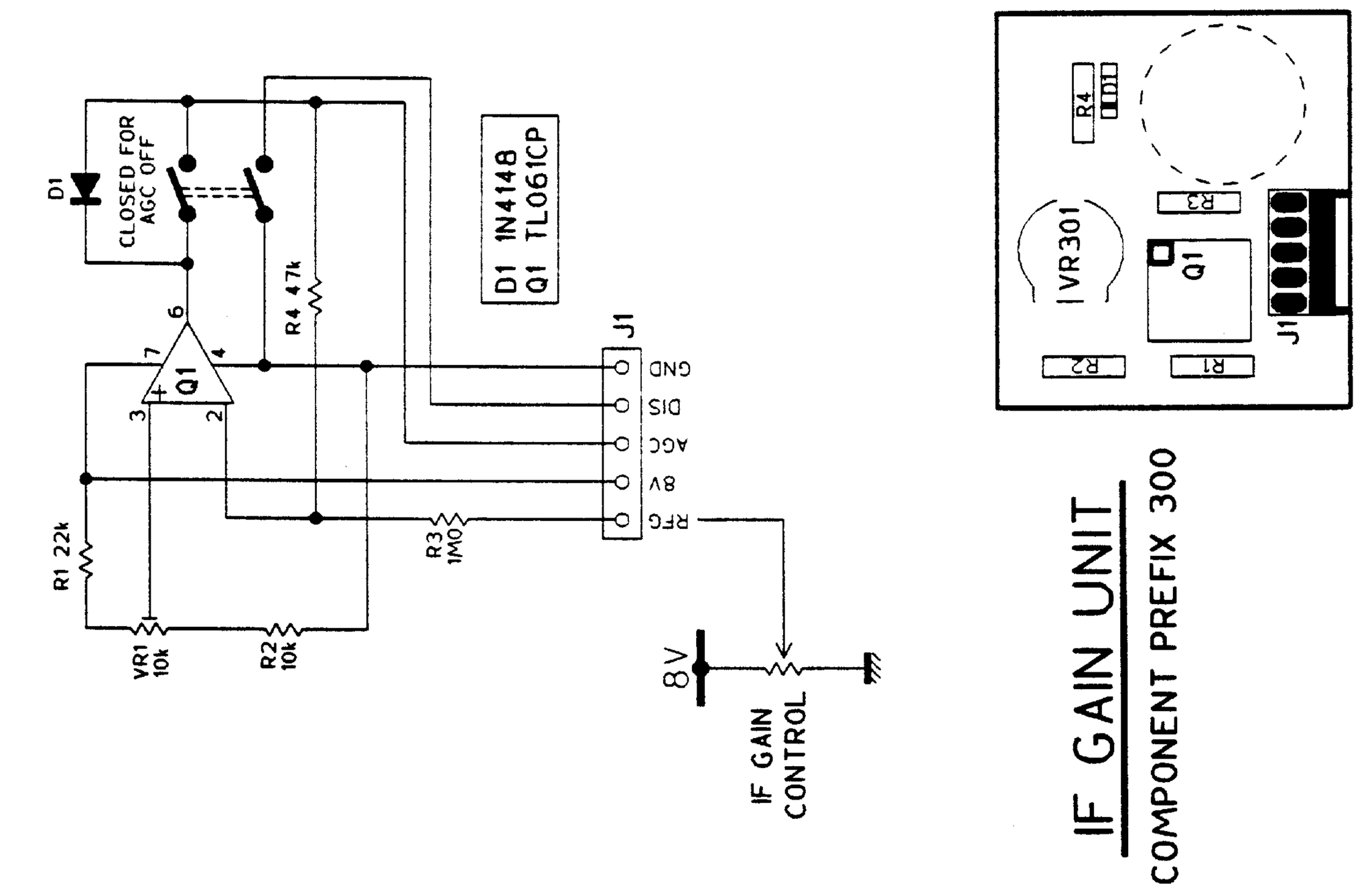
D1
CLOSED FOR AGC OFF
D1 1N4148
Q1 TL061CP
R1 22k
VR1 10k
R2 10k
R3 1M0
R4 47k
Q1
J1
GND
DIS
AGC
8V
RFG
8V
IF GAIN CONTROL
IF GAIN UNIT
COMPONENT PREFIX 300
VR301
R1
R2
R3
R4
Q1
J1

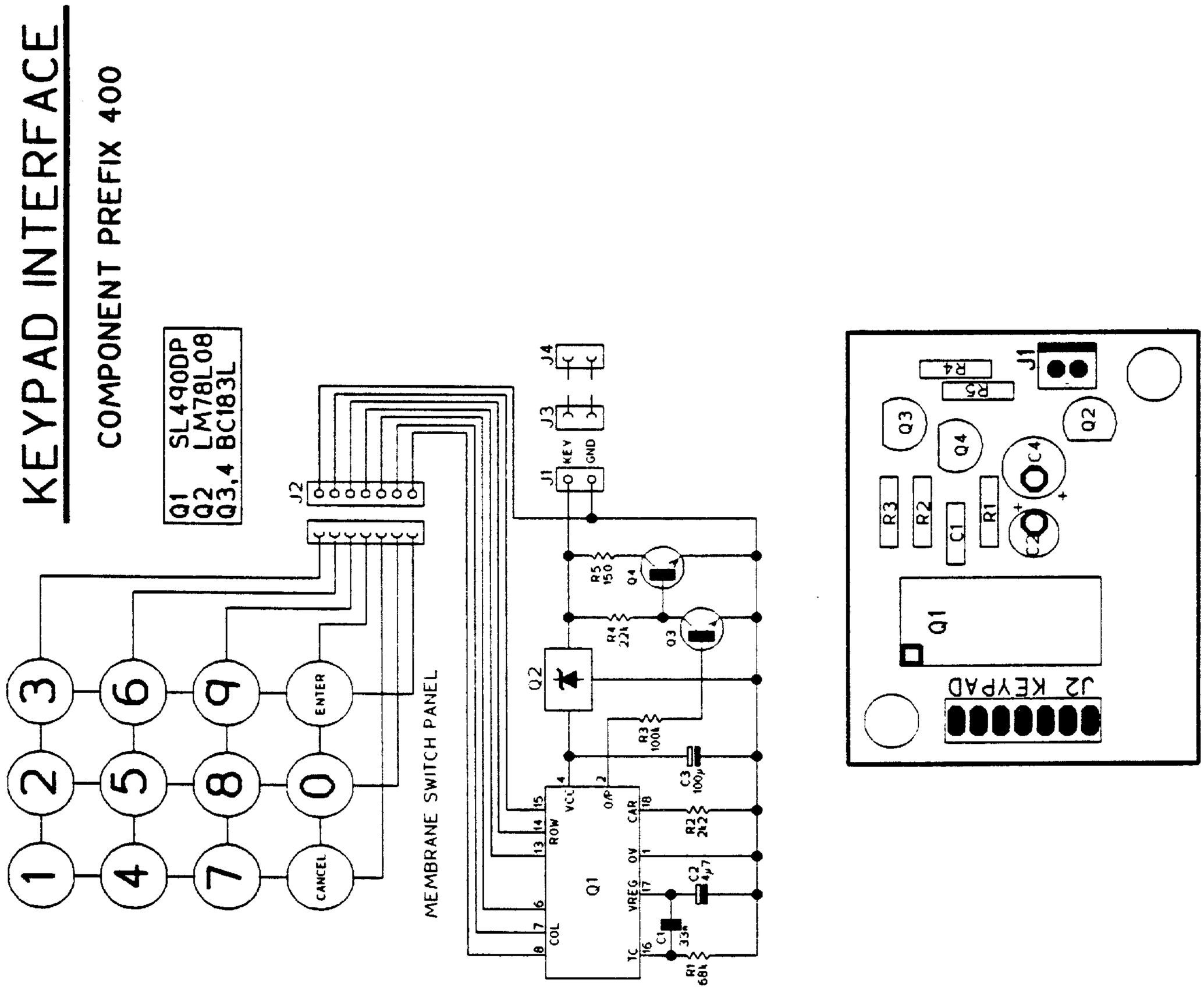
KEYPAD INTERFACE
COMPONENT PREFIX 400
Q1 SL490DP
Q2 LM78L08
Q3,4 BC183L
MEMBRANE SWITCH PANEL
CANCEL
ENTER
J2
J1
KEY
GND
J3
J4
R5 150
R4 22k
Q2
Q3
Q4
R3 100k
C3 100µ
R2 2k2
C2 4µ7
C1 33n
R1 68k
Q1
J2 KEYPAD

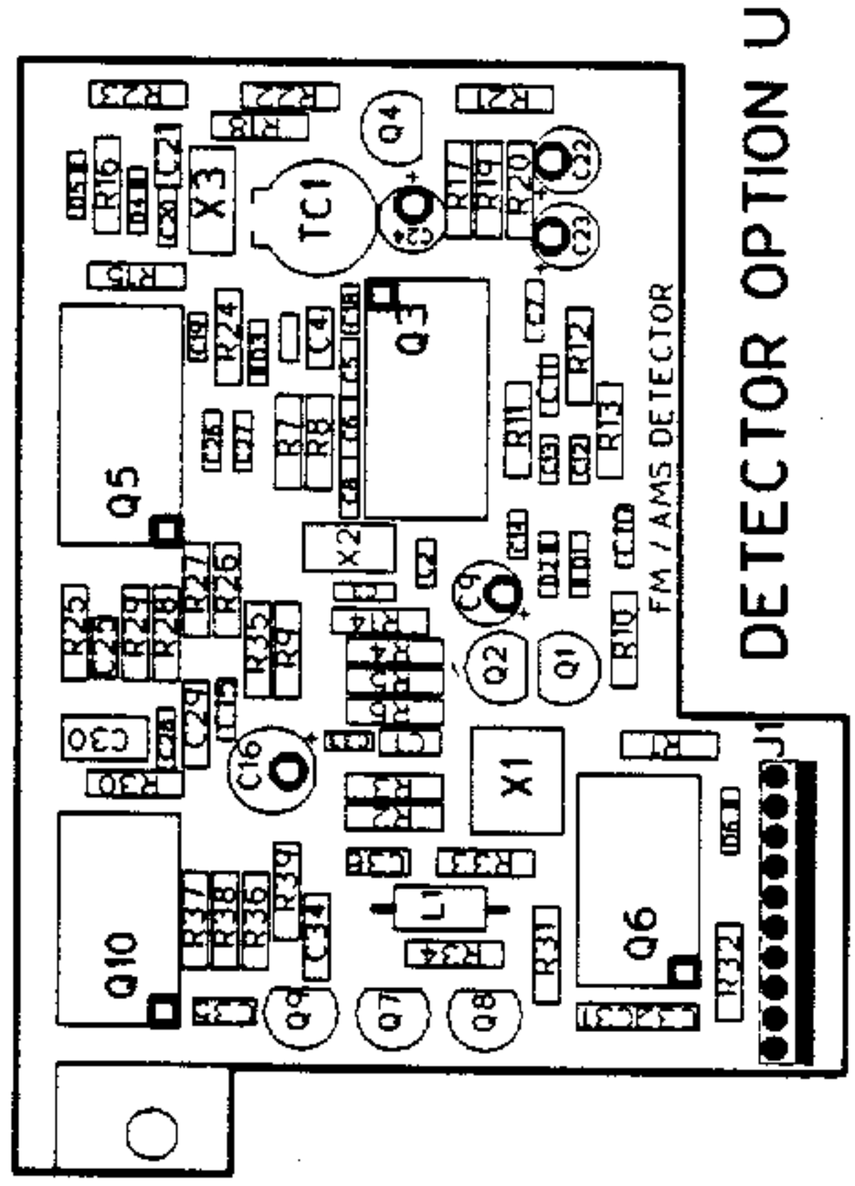

DETECTOR OPTION UNIT

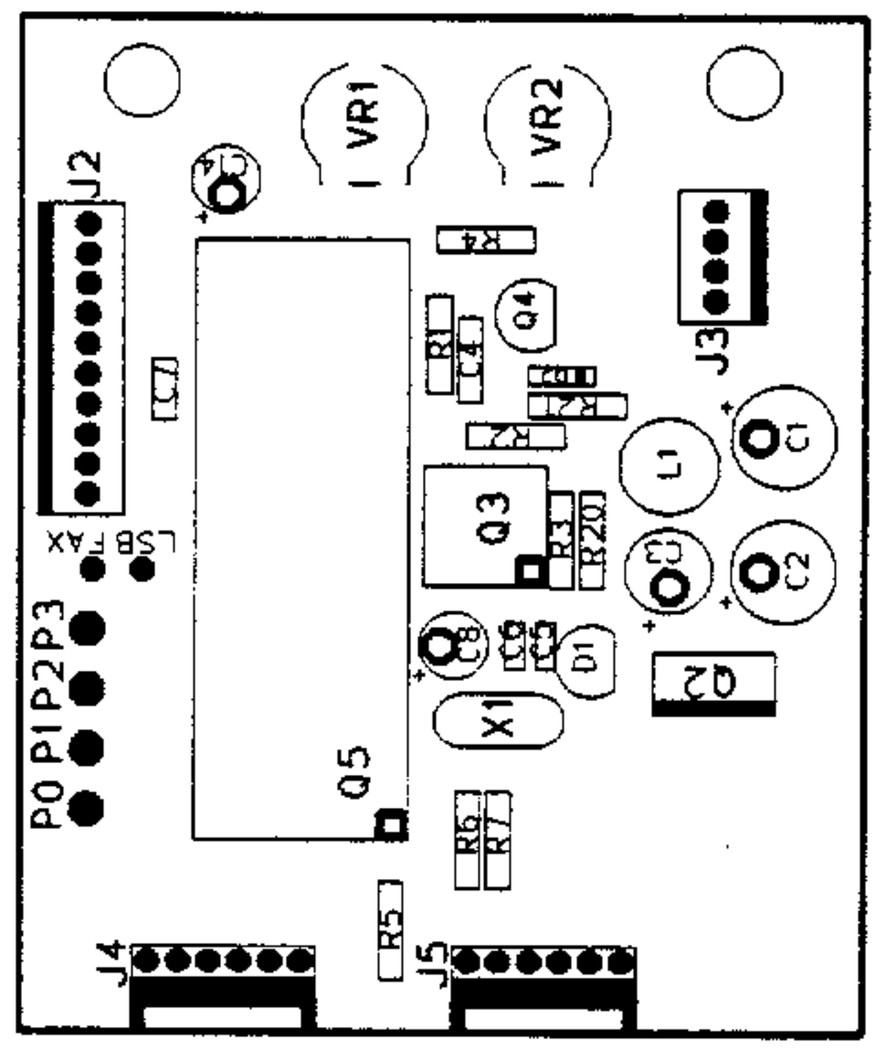

REMOTE CONTROL : B

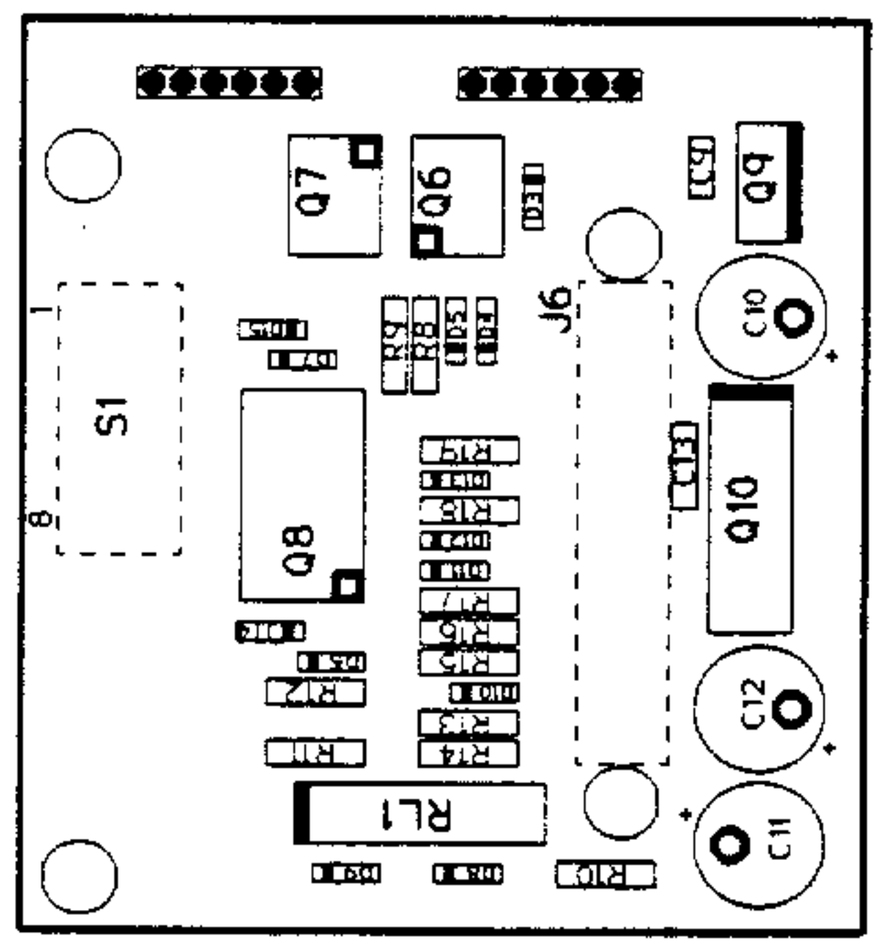

REMOTE CONTROL : A

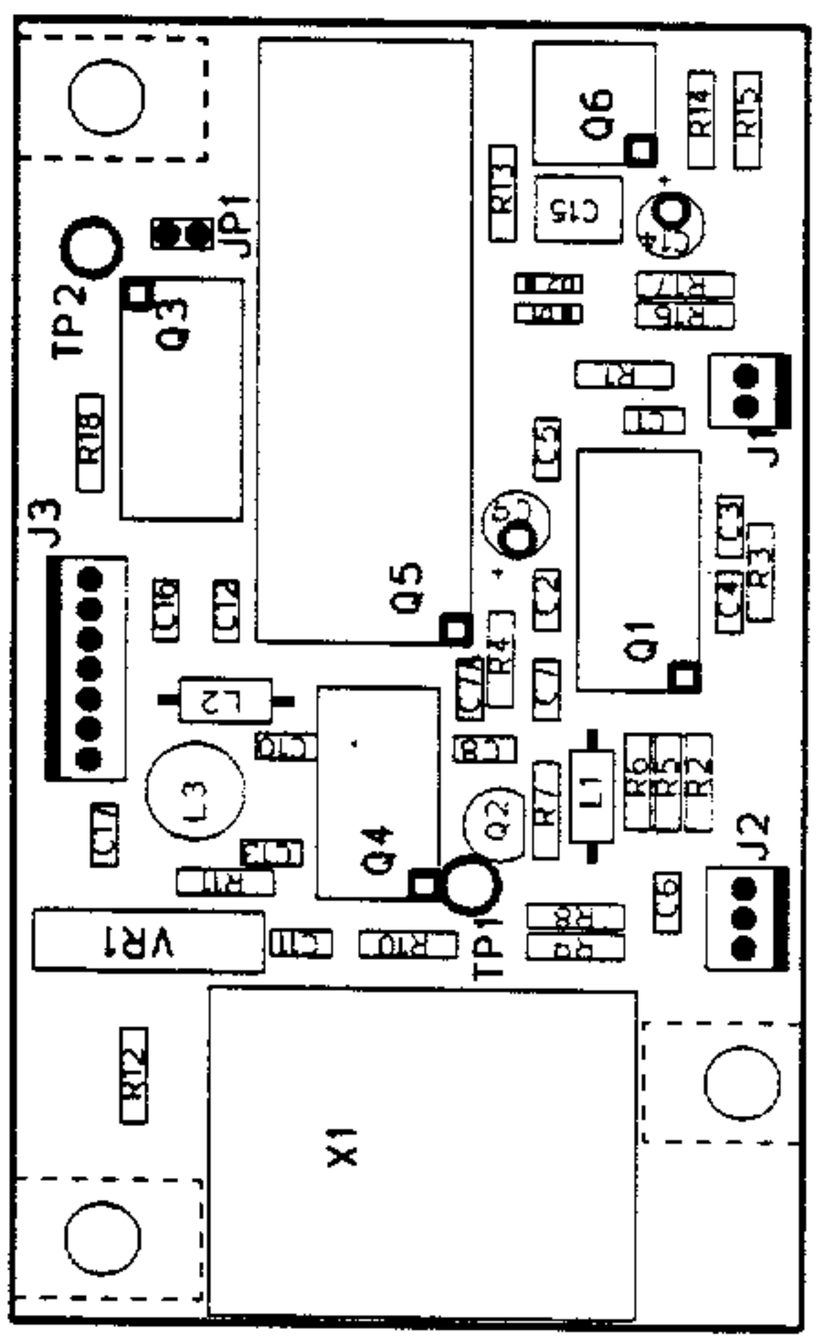

HIGH-STABILITY UNIT

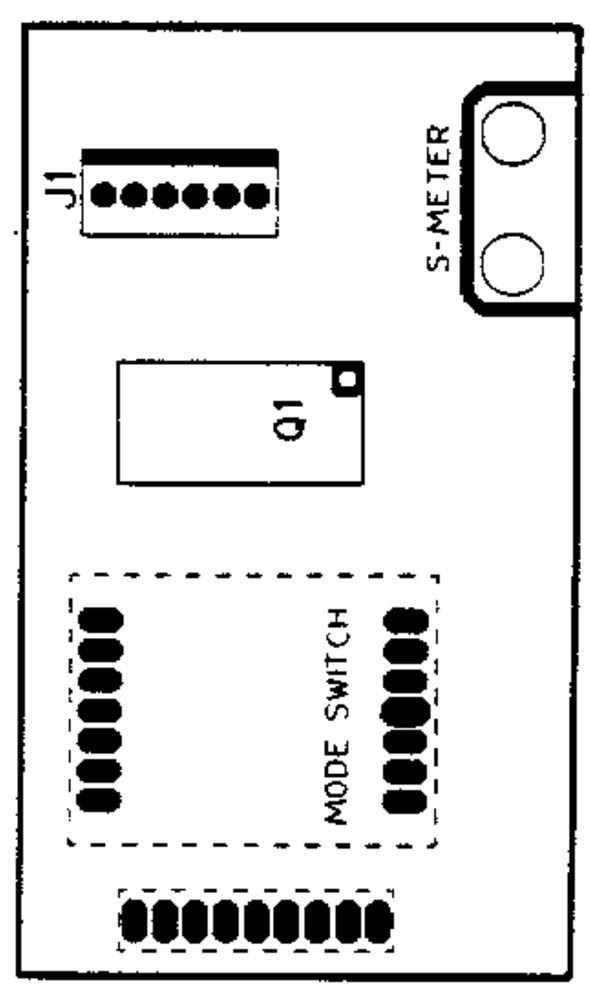

REMOTE CONTROL : MODE UNIT

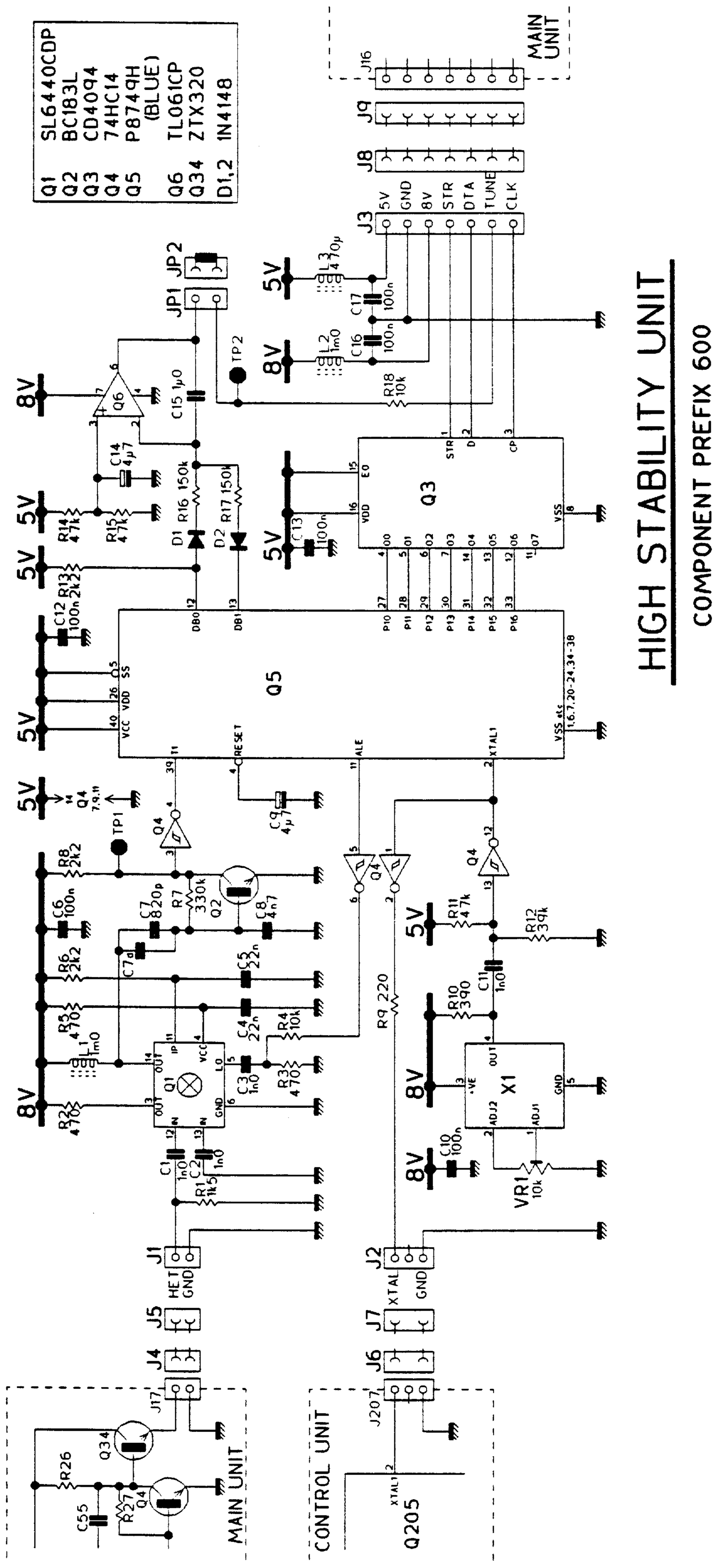
HIGH STABILITY UNIT
COMPONENT PREFIX 600
Q1 SL6440CDP
Q2 BC183L
Q3 CD4094
Q4 74HC14
Q5 P874SH (BLUE)
Q6 TL061CP
Q34 ZTX320
D1,2 1N4148
MAIN UNIT
CONTROL UNIT
Q205

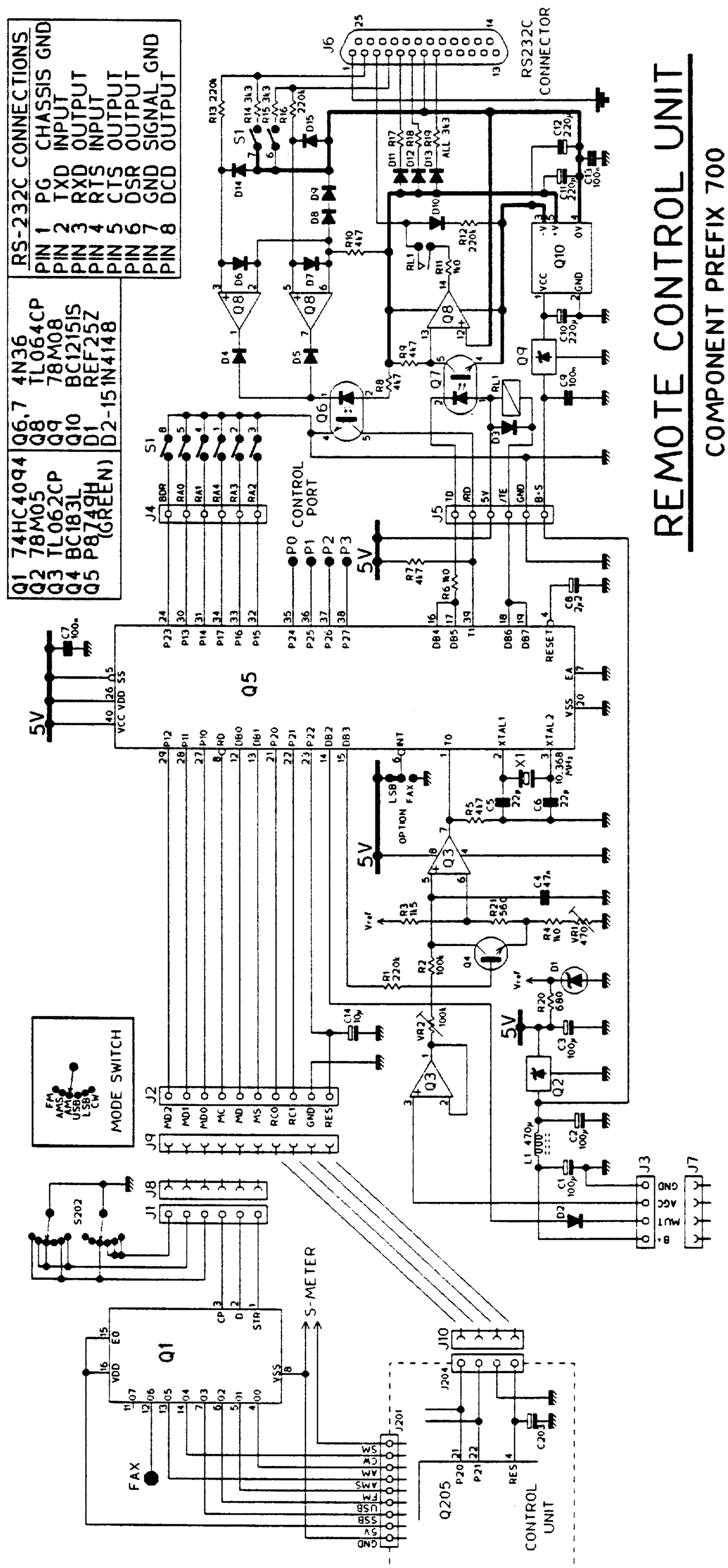
REMOTE CONTROL UNIT
COMPONENT PREFIX 700
RS-232C CONNECTIONS
PIN 1 PG CHASSIS GND
PIN 2 TXD INPUT
PIN 3 RXD OUTPUT
PIN 4 RTS INPUT
PIN 5 CTS OUTPUT
PIN 6 DSR OUTPUT
PIN 7 GND SIGNAL GND
PIN 8 DCD OUTPUT
Q1 74HC4094
Q2 78M05
Q3 TL062CP
Q4 BC183L
Q5 P87491H (GREEN)
Q6,7 4N36
Q8 TL064CP
Q9 78M08
Q10 BC1215IS
D1 REF25Z
D2-15 1N4148
RS232C CONNECTOR
CONTROL PORT
MODE SWITCH
S-METER
FAX
CONTROL UNIT

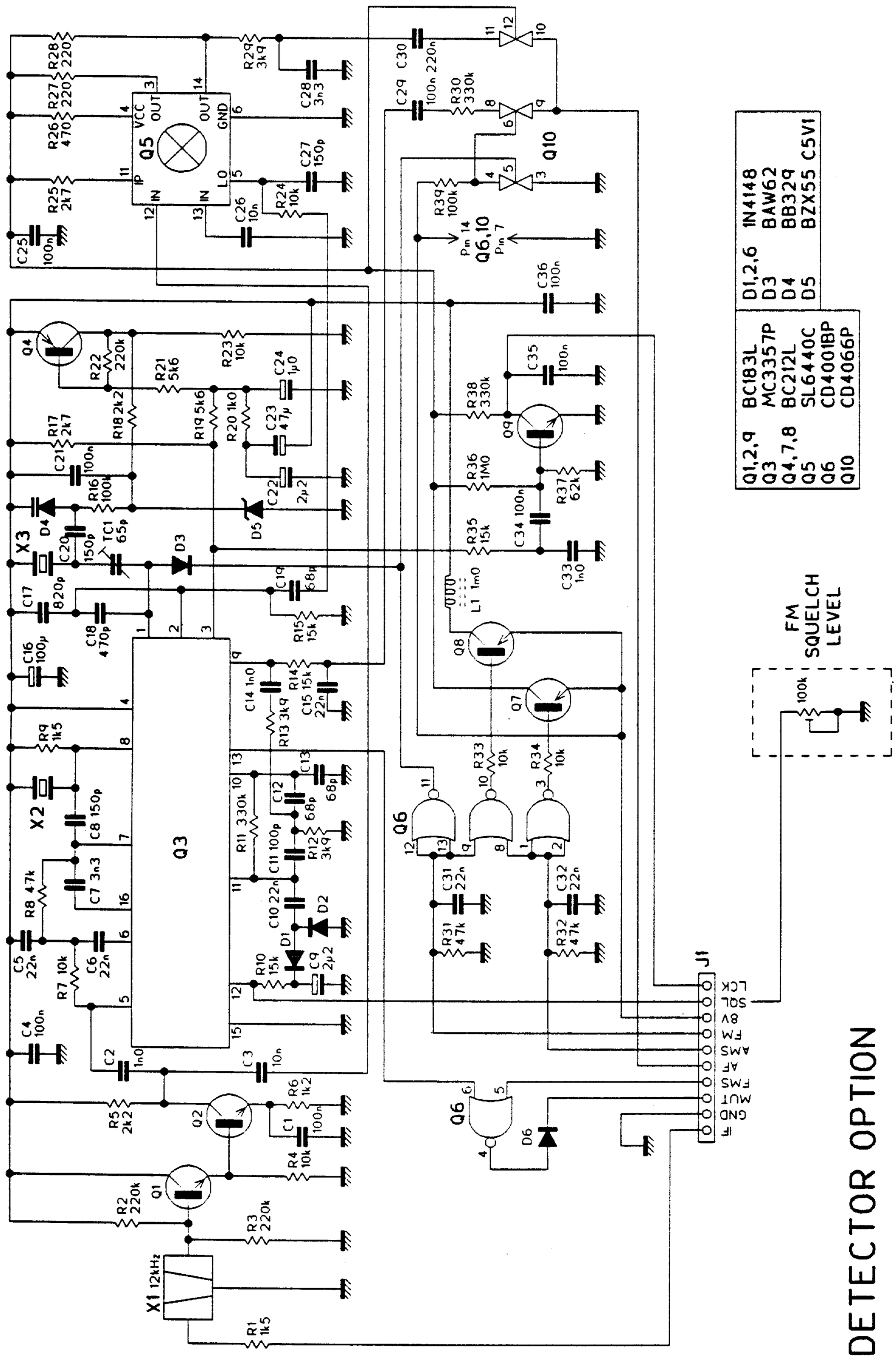
DETECTOR OPTIONS
FM SQUELCH LEVEL
Q1,2,9 BC183L
Q3 MC3357P
Q4,7,8 BC212L
Q5 SL6440C
Q6 CD4001BP
Q10 CD4066P
D1,2,6 1N4148
D3 BAW62
D4 BB329
D5 BZX55 C5V1
Q5
Q3
Q6,10
Q6
Q10
J1
LCK
SQL
BV
FM
AMS
AF
FMS
MUT
GND
IF
X1 12kHz
X2
X3

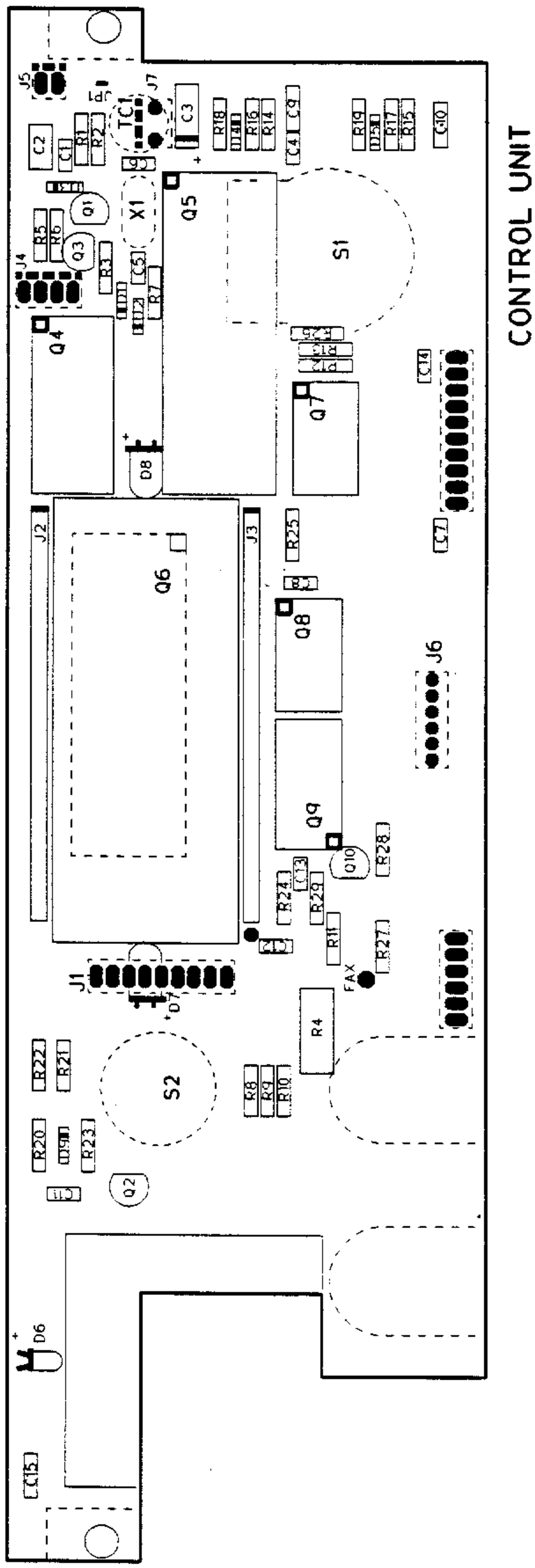
CONTROL UNIT
J5
J7
C2
C1
R1
R2
TC1
C3
R18
D14
R16
R14
C4
C9
R19
D15
R17
R15
C10
Q1
X1
Q5
S1
R5
R6
Q3
J4
R3
C5
R7
D11
D12
Q4
C14
Q7
D8
J2
J3
R25
C7
Q6
Q8
J6
Q9
Q10
R28
C13
R24
R29
R11
R27
J1
D7
FAX
R4
R22
R21
S2
R8
R9
R10
R20
D9
R23
C11
Q2
D6
C15

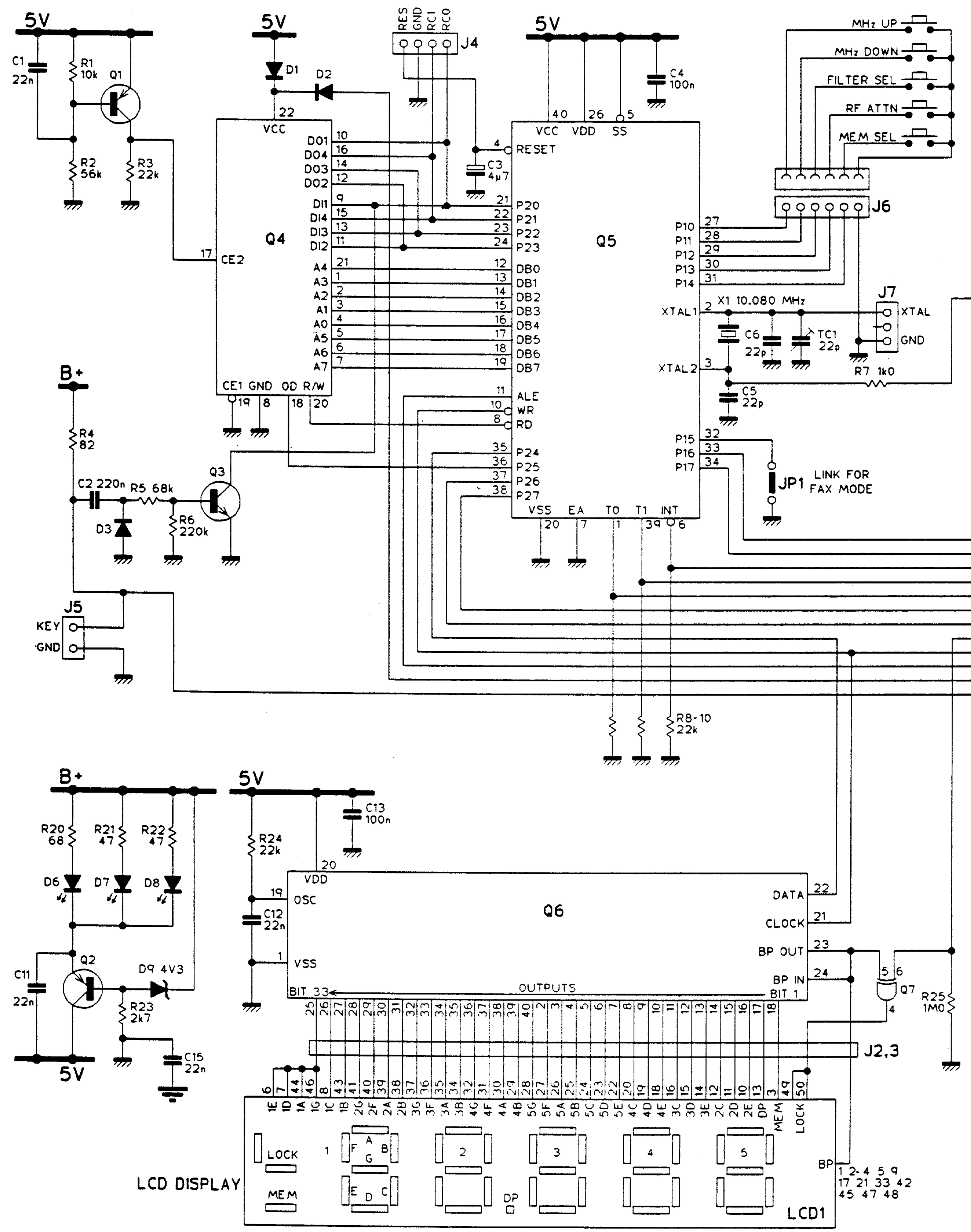
5V
C1 22n
R1 10k
Q1
R2 56k
R3 22k
D1
D2
22
VCC
Q4
17
CE2
CE1 GND OD R/W
19 8 18 20
RES GND RC1 RC0
J4
C3 4µ7
C4 100n
40 26 5
VCC VDD SS
RESET
Q5
MHz UP
MHz DOWN
FILTER SEL
RF ATTN
MEM SEL
J6
P10 P11 P12 P13 P14
X1 10.080 MHz
XTAL1
XTAL2
C6 22p
TC1 22p
C5 22p
J7
XTAL
GND
R7 1k0
P15 P16 P17
JP1
LINK FOR FAX MODE
ALE
WR
RD
P24 P25 P26 P27
VSS EA T0 T1 INT
20 7 1 39 6
R8-10 22k
B+
R4 82
C2 220n
R5 68k
Q3
D3
R6 220k
J5
KEY
GND
R20 68
R21 47
R22 47
D6
D7
D8
C11 22n
Q2
D9 4V3
R23 2k7
C15 22n
R24 22k
C13 100n
VDD
OSC
C12 22n
VSS
Q6
DATA
CLOCK
BP OUT
BP IN
BIT 33
OUTPUTS
BIT 1
Q7
R25 1M0
J2,3
LCD DISPLAY
LOCK
MEM
DP
LCD1
BP
1 2-4 5 9 17 21 33 42 45 47 48

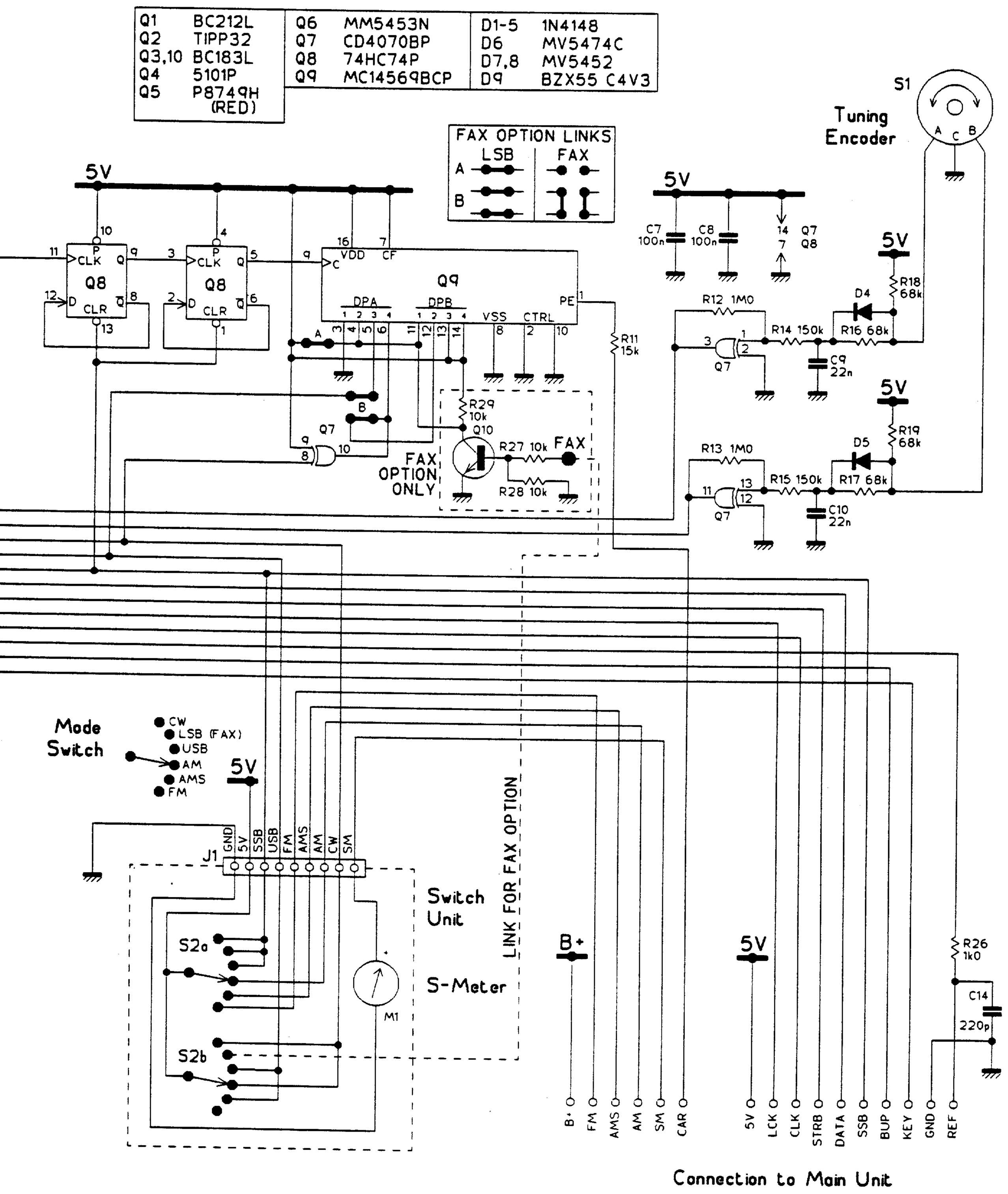

CONTROL UNIT

COMPONENT PREFIX 200.

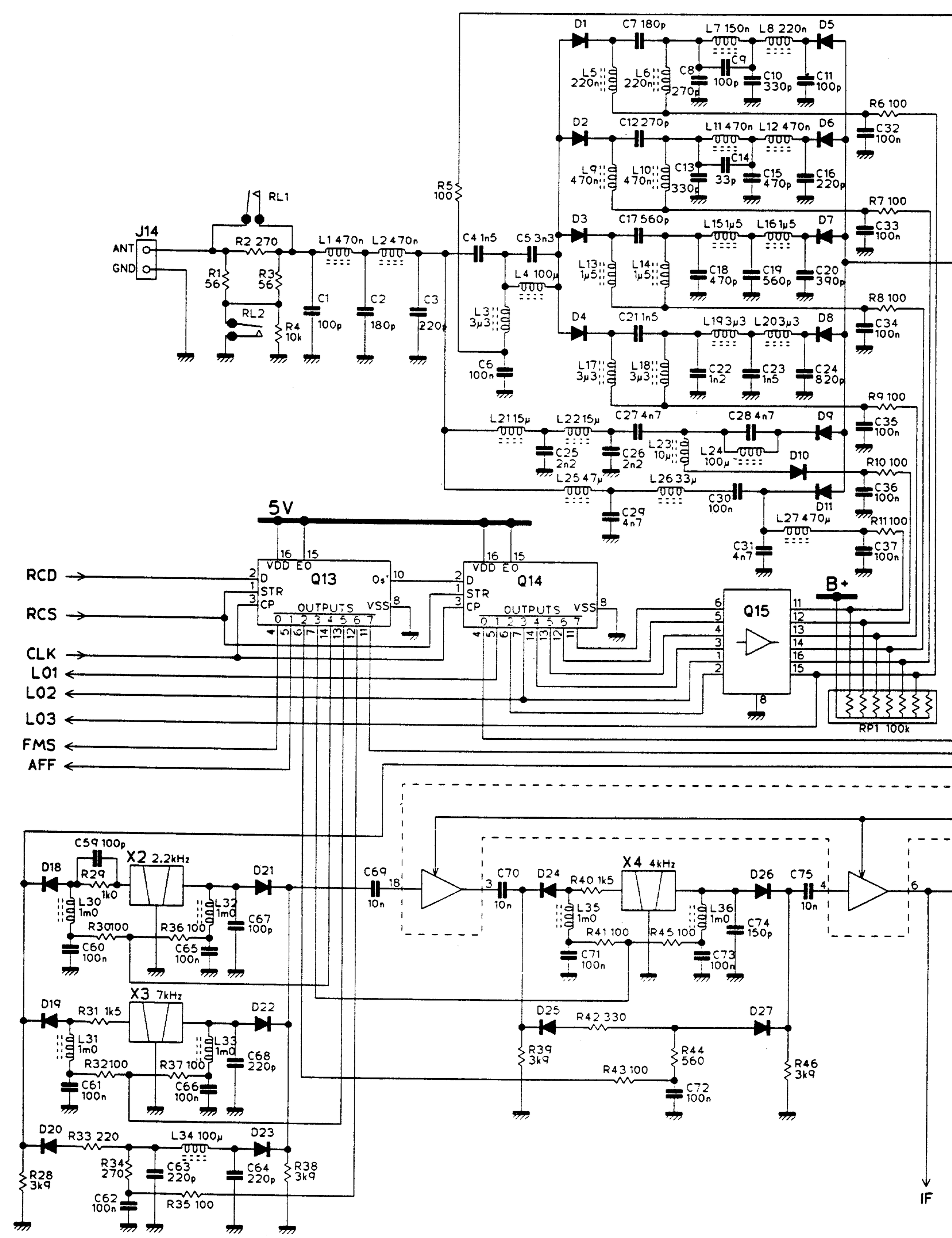
J14
ANT
GND
RL1
RL2
R1 56
R2 270
R3 56
R4 10k
L1 470n
L2 470n
C1 100p
C2 180p
C3 220p
R5 100
C4 1n5
C5 3n3
L4 100µ
L3 3µ3
C6 100n
D1
C7 180p
L7 150n
L8 220n
D5
L5 220n
L6 220n
C8 270p
C9 100p
C10 330p
C11 100p
R6 100
C32 100n
D2
C12 270p
L11 470n
L12 470n
D6
L9 470n
L10 470n
C13 330p
C14 33p
C15 470p
C16 220p
R7 100
C33 100n
D3
C17 560p
L15 1µ5
L16 1µ5
D7
L13 1µ5
L14 1µ5
C18 470p
C19 560p
C20 390p
R8 100
C34 100n
D4
C21 1n5
L19 3µ3
L20 3µ3
D8
L17 3µ3
L18 3µ3
C22 1n2
C23 1n5
C24 820p
R9 100
C35 100n
L21 15µ
L22 15µ
C27 4n7
C28 4n7
D9
C25 2n2
C26 2n2
L23 10µ
L24 100µ
D10
R10 100
C36 100n
L25 47µ
L26 33µ
C30 100n
D11
C29 4n7
L27 470µ
R11 100
C37 100n
C31 4n7
5V
RCD
RCS
CLK
L01
L02
L03
FMS
AFF
VDD EO
D
STR
CP
Q13
Q14
OUTPUTS
VSS
Q15
B+
RP1 100k
C59 100p
X2 2.2kHz
D18
R29 1k0
L30 1m0
R30 100
C60 100n
R36 100
L32 1m0
C65 100n
C67 100p
D21
X3 7kHz
D19
R31 1k5
L31 1m0
R32 100
C61 100n
R37 100
L33 1m0
C66 100n
C68 220p
D22
D20
R33 220
R28 3k9
R34 270
C62 100n
L34 100µ
C63 220p
R35 100
C64 220p
D23
R38 3k9
C69 10n
C70 10n
D24
R40 1k5
L35 1m0
R41 100
C71 100n
X4 4kHz
R45 100
L36 1m0
C73 100n
C74 150p
D26
C75 10n
D25
R42 330
R39 3k9
R43 100
R44 560
C72 100n
D27
R46 3k9
IF

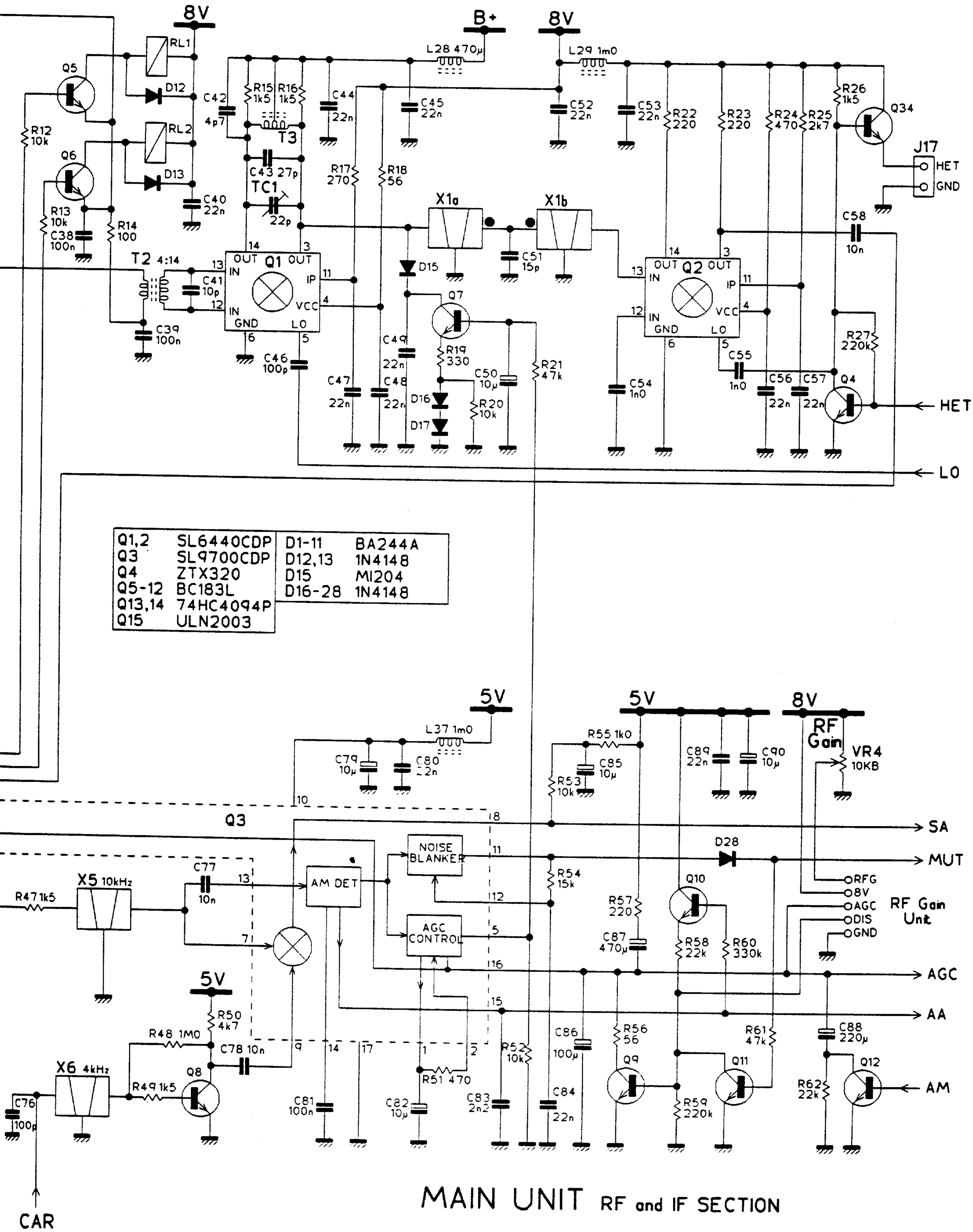

MAIN UNIT RF and IF SECTION

Q16,17	ZTX320	Q26	TDA1904	Q33	78M05
Q18.19	J310	Q27	74HC4066P	D29,30	BB329
Q20	BC212L	Q28	µPB553AC	D31-33	BA244A
Q21-23	BC183L	Q29	TDD1742T	D34-42	1N4148
Q24	MC3403P	Q30,31	74HC4094P	D43-45	1N4002
Q25	TL062CP	Q32	LM2930T-8	D46-49	BAW62

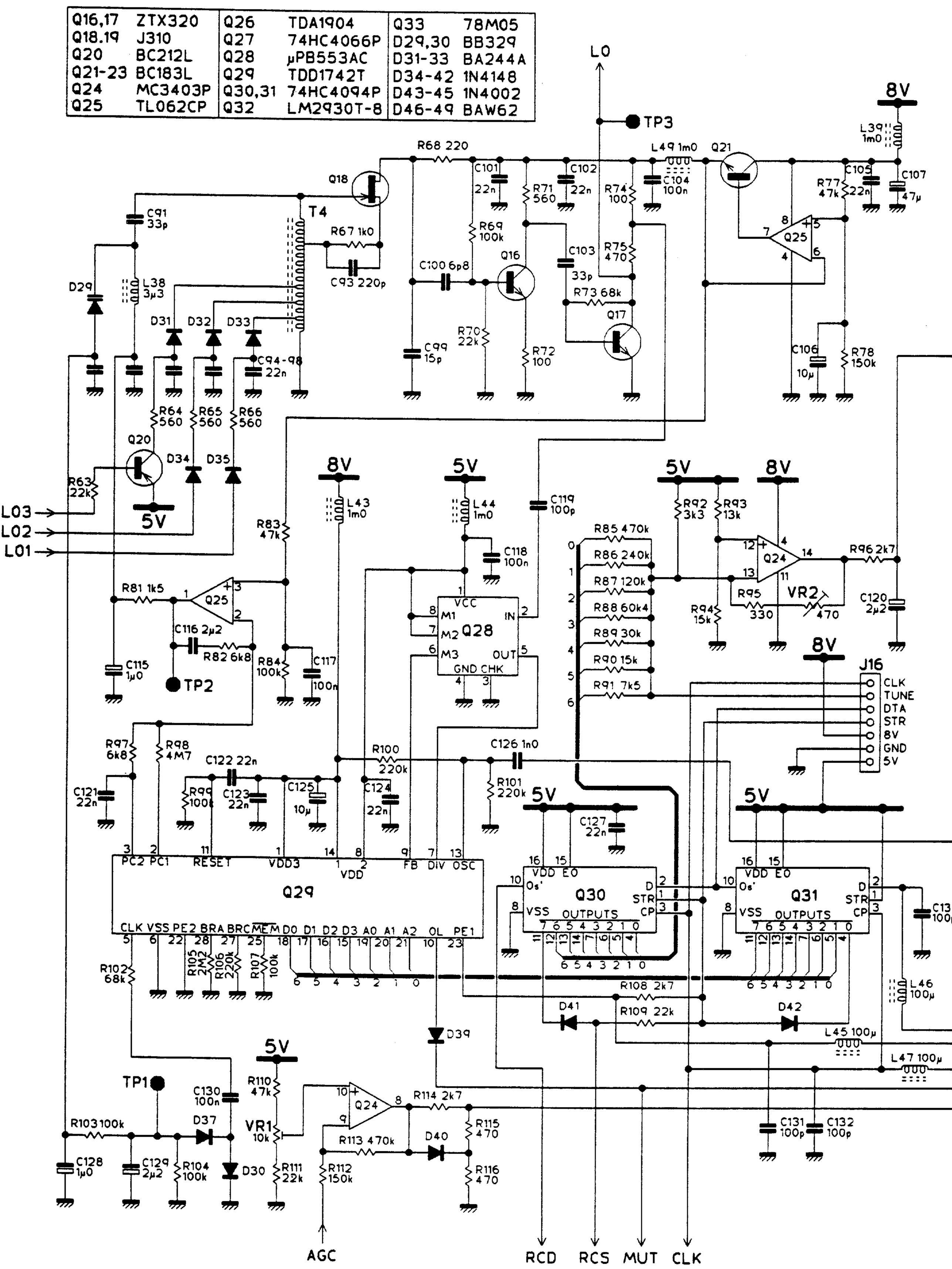

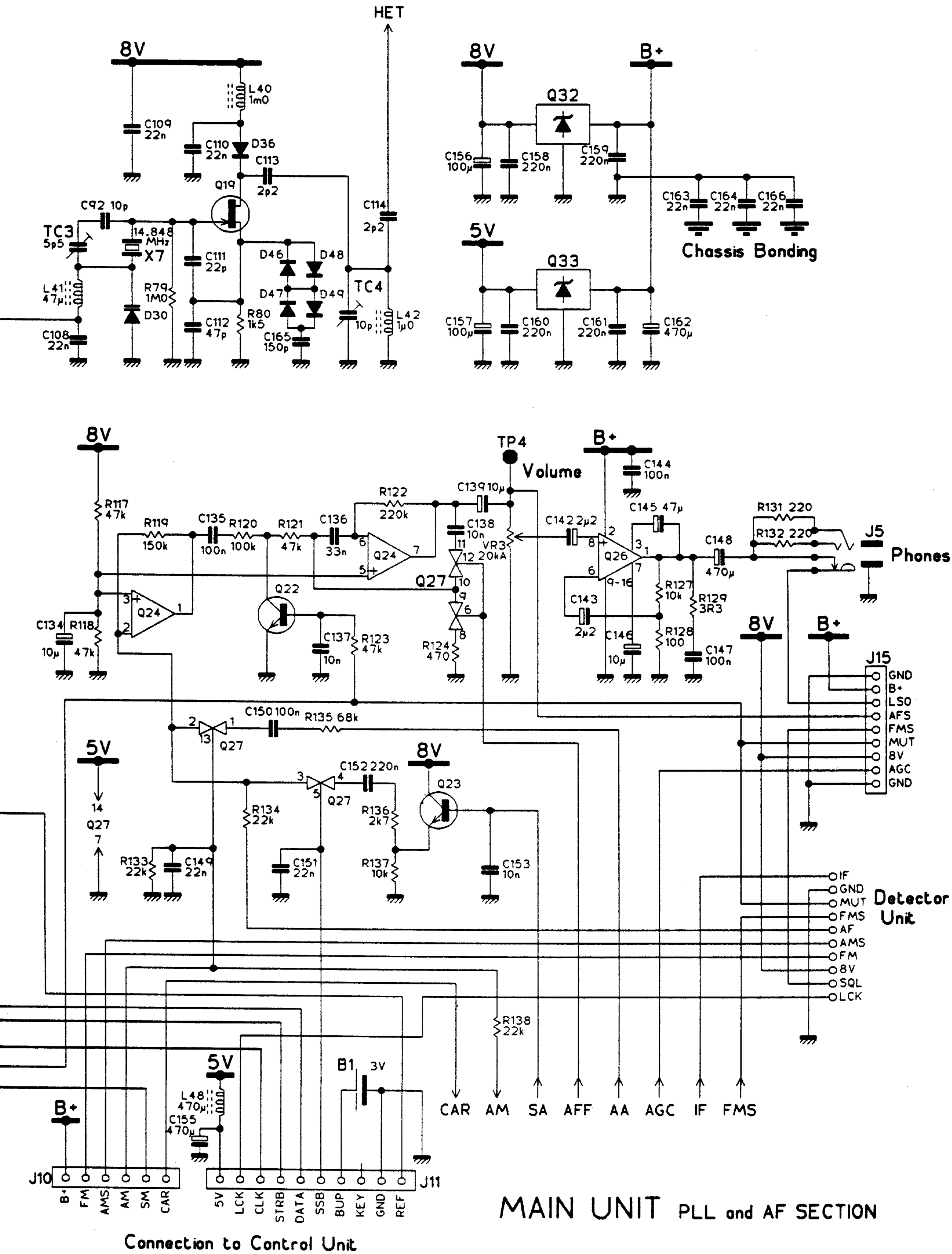
HET
8V
L40 1m0
C109 22n
C110 22n
D36
C113 2p2
Q19
C92 10p
TC3 5p5
14.848 MHz X7
C111 22p
D46
D48
D47
D49
C114 2p2
TC4
L41 47µ
R79 1M0
D30
C112 47p
R80 1k5
C165 150p
10p
L42 1µ0
C108 22n
8V
B+
Q32
C156 100µ
C158 220n
C159 220n
C163 22n
C164 22n
C166 22n
Chassis Bonding
5V
Q33
C157 100µ
C160 220n
C161 220n
C162 470µ
8V
TP4
Volume
B+
C144 100n
R117 47k
R119 150k
C135 100n
R120 100k
R121 47k
C136 33n
R122 220k
C139 10µ
C138 10n
VR3 20kA
C142 2µ2
C145 47µ
R131 220
R132 220
J5
Phones
C148 470µ
Q24
Q27
Q22
Q26
C134 10µ
R118 47k
C137 10n
R123 47k
R124 470
C143 2µ2
C146 10µ
R127 10k
R129 3R3
R128 100
C147 100n
8V
B+
J15
GND
B+
LSO
AFS
FMS
MUT
8V
AGC
GND
C150 100n
R135 68k
5V
8V
C152 220n
Q23
R134 22k
R136 2k7
R133 22k
C149 22n
C151 22n
R137 10k
C153 10n
IF
GND
MUT
FMS
AF
AMS
FM
8V
SQL
LCK
Detector Unit
R138 22k
5V
B1 3V
L48 470µ
C155 470µ
B+
CAR AM SA AFF AA AGC IF FMS
J10
B+ FM AMS AM SM CAR
J11
5V LCK CLK STRB DATA SSB BUP KEY GND REF
Connection to Control Unit
MAIN UNIT PLL and AF SECTION

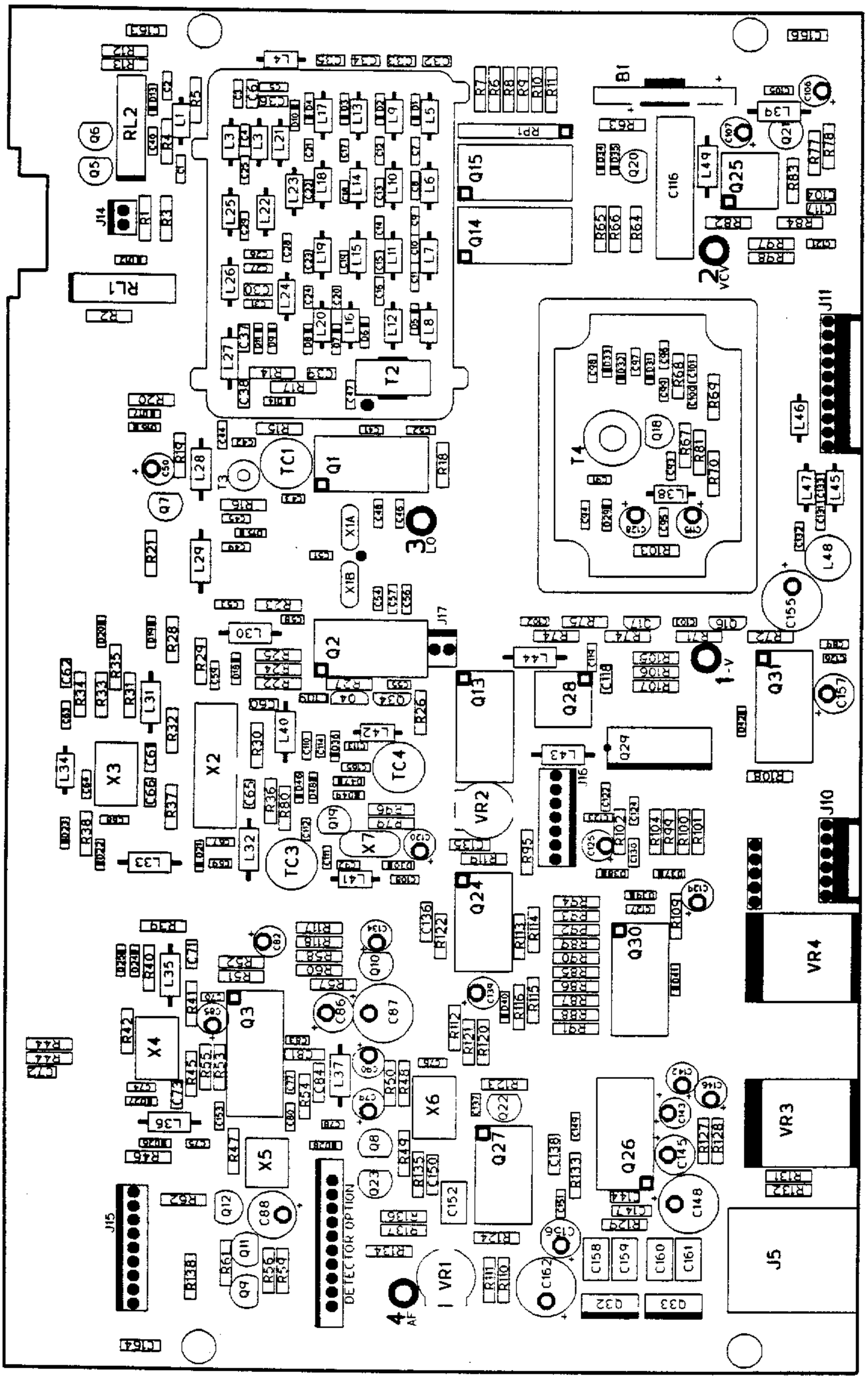
MAIN UNIT
DETECTOR OPTION
RL2
RL1
TC1
TC3
TC4
VR1
VR2
VR3
VR4
J5
J10
J11
J14
J15
J16
J17
Q1
Q2
Q3
Q13
Q14
Q15
Q24
Q25
Q26
Q27
Q28
Q29
Q30
X1A
X1B
X2
X3
X4
X5
X6
X7
T2
T3
T4
B1
2 VCO
3 LO
4 AF
1 -V

LOWE ELECTRONICS LIMITED
Chesterfield Road, Matlock, Derbyshire, DE4 5LE ENGLAND
Telephone: 0629 580800 Fax: 0629 580020